CITY OF HAYWARD
AGENDA REPORT

Meeting Date 10/07/04
Agenda Item 2

TO: Planning Commission

FROM: Erik J. Pearson, AICP, Associate Planner

SUBJECT: **Text Amendment Application No. PL-2004-0337 – Paige Bennett (Applicant):** Request to Amend the Fence Height Regulations within the Zoning Ordinance to Allow an 8-Foot High Fence Where the Ordinance Limits the Fence Height to 6 Feet

RECOMMENDATION:

Staff recommends that the Planning Commission recommend that the City Council:

1. Adopt the Initial Study and Negative Declaration prepared pursuant to the California Environmental Quality Act (CEQA) guidelines; and
2. Deny the proposed text amendment, subject to the attached findings.

BACKGROUND

On September 13, 2002 a complaint was received by the City's Community Preservation Division that the applicant had constructed a 7-foot tall fence, consisting of vertical boards with no decorative features. Upon receipt of a violation notice, the applicant applied for a variance to keep the fence. The Planning Commission approved the variance on April 10, 2003. That decision was appealed by a neighbor and the City Council upheld the appeal, denying the variance on May 27, 2003. The applicant was then given 30 days to lower the fence. The applicant did not lower the fence and on August 26, 2003 filed a lawsuit against the City. In September 2003 a settlement was reached, in which the applicant agreed to lower the fence by March 31, 2004. The applicant did not lower the fence by the deadline and after additional assessment of fines by the Community Preservation Division, an application to have the Ordinance amended to increase the allowable fence height was submitted on June 15, 2004.

DISCUSSION

The applicant has proposed an amendment to the Zoning Ordinance to allow 8-foot high fences on all residential properties in Hayward. The Zoning Ordinance currently permits 8-foot-high fences on rear or side property lines of residential properties when abutting:

1) commercial property
2) industrial property
3) a freeway
4) a flood control channel
5) an arterial street
6) a parking lot.

The Zoning Ordinance also makes allowances for taller fences when there is a difference in elevation between residential properties in that a 6-foot-high fence is permitted on top of a retaining wall. Property owners may also apply for a variance to fence height limitations when there are special circumstances relating to the property.

The California Building Code requires a building permit for any fence exceeding 6 feet in height. Plans with structural calculations would have to be submitted with a building permit application, which would be reviewed to ensure that fences will withstand calculated wind loads and to ensure that exiting requirements from a yard are met. Although reputable fencing companies are aware of the requirement for building permits for fences that exceed 6 feet in height, fences taller than 6 feet are frequently installed without benefit of a building permit. Several recent applicants who sought variances for tall fences after erecting their fences said that they did not know that a permit was required. If taller fences are permitted, it may lead to more people building taller fences without benefit of a building permit and may lead to more enforcement problems in the future.

The applicant suggests that all fences be subject to City review. Current Zoning Ordinance regulations state that all fences are subject to approval of a site plan review application. However, because no building permit is required for a fence 6 feet or lower, fence plans are not presented to the City. If plans are submitted and the proposal meets all standards and design guidelines, then the site plan review application is waived.

The applicant surveyed the cities in Alameda County and submitted ordinance information from those cities. Of those cities, the following allow fences exceeding 6 feet in height without a discretionary permit:

Alameda (requires the top two feet of an 8-foot fence to be 50 percent "see-through" material)
Dublin (requires the top two feet of an 8-foot fence to be 50 percent "see-through" material)
Fremont (8 feet allowed)
San Leandro (7 feet allowed)

The following cities allow fences exceeding 6 feet in height when certain conditions are present or when a discretionary permit is approved:

Berkeley (requires Administrative Use Permit when fence exceeds 6 feet)
Livermore (allows 8-foot fence with a Conditional Use Permit when abutting a truck route)
Oakland (requires Conditional Use Permit)
Piedmont (requires Design Review)
Pleasanton (requires public hearing with zoning administrator)

Union City (allows 8-foot fence when abutting a flood control channel, railroad, park, licensed residential care or health facility, school or child care center)

The following jurisdictions do not allow fences over 6 feet in height:

Albany
Emeryville
Newark
Unincorporated Alameda County

The applicant further requests that the City adopt a standardized fence material and style that would apply to all fencing in the City. A decorative 8-foot fence design provided by the City of Fremont was submitted and is attached (see Attachment C). This design is not a requirement in Fremont, but is provided as a suggestion for taller fences. A standardized decorative 8-foot design may be a good standard where homes back up to arterial streets like Mission and Hesperian Boulevards to achieve an attractive, harmonious streetscape. However, a standardized design may not be appropriate city-wide where diversity is encouraged, such as within the hill area or older neighborhoods where architecture varies significantly.

Some people have argued that taller fences are needed to keep animals in a yard. Animals that require such tall fences may not be appropriate in a neighborhood where the primary land use is single-family homes. When dogs are not trained to stay behind a 6-foot fence, there are other measures that may be employed to keep dogs in a yard, such as constructing a barrier extending horizontally from a 6-foot fence, planting large prickly shrubs (such as holly, cacti, bougainvillea) adjacent to a 6-foot-high fence, containing the dogs with covered dog runs, or restraining the dogs on leashes.

The applicant and other proponents of taller fencing argue that higher fences are desirable for privacy and security. In staff's opinion, a 6-foot fence is adequate to provide an acceptable degree of privacy from people in neighboring yards or on streets as most people's eye level is below 6 feet. Some have stated that privacy from neighboring two-story homes is a concern, but even an 8-foot fence would not provide privacy from second story windows. In order to have privacy in a rear yard adjacent to a two-story home, a fence height of almost 11 feet would be necessary (see Attachment D). If blocking views into first floor windows is desired, an even taller fence would be needed. As demonstrated on Attachment D, effectively placed evergreen trees and shrubs can also provide screening of an undesirable view and provide privacy.

One issue that was raised by a Planning Commissioner in the past was that maybe taller fences are necessary now because lots have gotten smaller. It may be more crucial to keep fences low on small lots to prevent a feeling of being closed in and to prevent a yard from being too shaded.

Fences taller than 6 feet may be in conflict with the City's Design Guidelines. The Guidelines state that fences and walls "may be an obnoxious visual element if they block significant views, provide a surface for graffiti, or are out of proportion to the project." Specific guidelines that the amendment may conflict with also include:

- Take advantage of good views and natural light for living areas.

- Allow for surveillance by police and emergency access when planning security fences and gates.
- Where significant views would be blocked or pedestrian routes cut off, limit use of sound and privacy walls.
- Design walls to complement adjoining architecture in materials, detail and proportion.

Fences that are 8 feet tall have the potential to block views and sunlight from reaching windows, especially on the side of a house. Some homes in Hayward have beautiful views of the hills and some have views of the bay or other area landmarks. These views may be from first floor windows or ground level decks or patios and an 8-foot fence is much more likely to block the view than is a 6-foot fence.

Taller fences also may be considered out of proportion when surrounded by 6-foot tall fences on neighboring properties. Most residential rear yards are bordered by three or more neighboring properties. If one owner in an area builds a tall fence around their own yard, there could be inconsistent fence heights enclosing surrounding yards. Neighborhoods have been built throughout the City for decades with 6-foot fences dividing side and rear property lines. The introduction of 8-foot fences now may result in uneven, inconsistent fence heights throughout a neighborhood.

The Police Department opposes the proposed amendment for four reasons:

1) Criminals would have more privacy to work undetected behind higher fences. Burglaries would increase.
2) Officer safety – suspects would be able to hide and not be seen more easily.
3) Rather than scale fences, officers would be forced to kick down fences when chasing suspects (which would result in more claims against the City).
4) Either climbing the 8-foot fences, falling off of them, or kicking them down would cause more injuries to officers (which would result in more claims).

Some plants, such as bougainvillea, hawthorne, yucca, wild rose, holly, or other thorny varieties also make better, and more aesthetically pleasing, security barriers than fences do. Landscaping can also allow air circulation while providing visual screening. While it would be more difficult for a person to scale an 8-foot fence than a 6-foot fence, a taller fence may also prevent a burglar from being seen either from the street or by adjacent neighbors or police.

In staff's opinion, lower fences allow better neighbor-to-neighbor interaction, leading to closer neighborhoods and communities where neighbors look out for each other. Over-the-fence interaction might also include passing garden produce or borrowed items or just talking about common interests. This type of communication is just possible with a 6-foot fence, but a 7 or 8-foot high fence is not conducive to this interaction.

An 8-foot-high fence affects neighboring properties as well as the property owner who installs it. When a building permit is requested for a fence along a property line, both property owners must sign the building permit application. If a neighboring property owner is adverse to installing an 8-foot-high fence, the individual desiring the higher fence would have to install it entirely on his/her property and not on the property line. If this were to occur, two fences would be erected within inches of each other, creating a dead space where weeds may grow and trash may accumulate, which would have a negative visual impact.

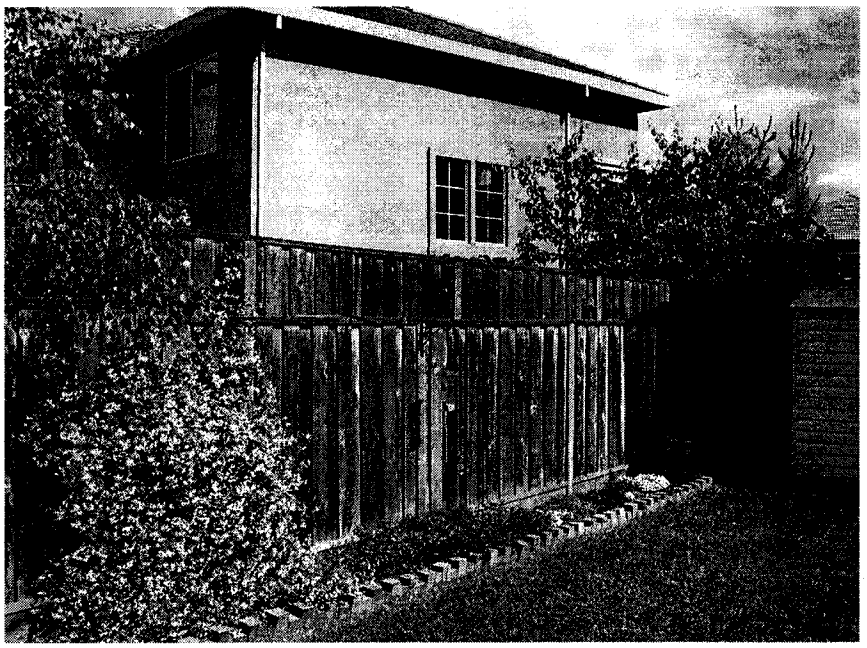

View of 7-foot fence from neighbor's property.

If the Planning Commission recommends to the City Council approval of a text amendment allowing taller fences, staff would recommend requiring a site plan review application as standard procedure so that adjoining property owners can be notified. The site plan review application would be required prior to submittal of a building permit application and would help ensure that views are not blocked and that the extra height is not imposed on an unwilling neighbor. Also, a site plan review application requires a property owner signature. If a fence is proposed on a property line, both owners would need to sign the application as mentioned above, however, it is not unusual for tall fences to be installed without the property owner contacting the City and the matter becomes one of a building code or Community Preservation violation.

ENVIRONMENTAL REVIEW:

An Initial Study and Negative Declaration have been prepared pursuant to the California Environmental Quality Act (CEQA) guidelines. If the Planning Commission and City Council are inclined to approve an amendment allowing taller fences, the site plan review and building permit processes could ensure that significant environmental impacts (such as loss of views) would be avoided.

PUBLIC NOTICE:

On June 22, 2004, a Referral Notice was sent to every Homeowners Association and every member of each Neighborhood Task Force in the City. The Referral Notice provided an opportunity for persons to comment on the proposal. Staff received a total of 14 phone calls, e-mails and letters (9 were in support of the amendment and 5 were opposed). Those in favor of the ordinance change cited the following reasons:

- the preference to shield and be shielded from bad views;
- crime may be reduced;
- a 6-foot fence is not adequate to create a fenced or gated community;
- a 6-foot fence has no advantage over an 8-foot fence; and
- an 8-foot fence provides better security.

Additional ideas from supporters included: requiring an over-the-counter permit, requiring landscape screening to help prevent graffiti, allowing 8-foot fences only in rear yards and requiring the fence height to be stepped or terraced from a property corner.

People opposing the text amendment made the following comments:

- lower and more open fences are desired;
- lower fences allow more friendly neighborhoods;
- 8-foot fences would reduce airflow around homes;
- side yard plantings would get no sunlight;
- higher fences would make each house look like a fortress;
- yards would be dark at night;
- shaded areas with reduced airflow may lead to more mold and dry rot;
- higher fences would isolate neighbors;
- Community Preservation cannot see over 8-foot fences; and
- people needing the extra height should have to plead their case for a permit.

On September 17, 2004, notice that an Environmental Initial Study and Negative Declaration had been prepared was posted in the City Clerk's Office, the Main City Hall bulletin board, and in all City library branches. On September 18, 2004, a Notice of Public Hearing for the Planning Commission meeting was published in the local newspaper, The Daily Review. Local fence companies were also notified of the public hearing.

CONCLUSION:

The proposed text amendment is not consistent with general planning principles such as promoting a sense of community and neighborhood watchfulness and adopted land use policies of the General Plan such as the preservation of viewsheds and maintaining the integrity of neighborhoods. The Zoning Ordinance already addresses the need for taller fences for properties located adjacent to commercial properties, arterial streets and other incompatible land uses. Also, where special circumstances apply to an individual property, a variance may be requested. If the Planning Commission is inclined to recommend approval of the amendment to the City Council, staff would suggest requiring a site plan review application for any fence exceeding 6 feet. Finally, if the amendment is approved, the City's Design Guidelines would need to be revised to ensure that views are not blocked and possibly to include a standard fence design for certain areas.

Prepared by:

Erik J. Pearson, AICP
Associate Planner

Recommended by:

Dyana Anderly, AICP
Planning Manager

Attachments:

A. Findings for Denial
B. Environmental Initial Study and Negative Declaration
C. Letter from applicant with spreadsheet
D. City of Fremont Fence Detail
E. Fence Height Sketch
F. Letters from interested parties

FINDINGS FOR DENIAL

TEXT AMENDMENT APPLICATION NO. PL-2004-0337
Paige Bennett (Applicant)

Request to amend the fence height regulations within the zoning ordinance to allow an 8 foot high fence where the ordinance limits the fence height to 6 feet.

A. Approval of Text Change Application No. 2004-0337 would not cause a significant impact on the environment as documented in the Initial Study prepared per the California Environmental Quality Act Guidelines;

B. Substantial proof does not exist that the proposed change will promote the public health, safety, convenience, and general welfare of the residents of Hayward in that higher fences may isolate neighbors and restrict light and air, which limit landscape opportunities and may promote the growth of mold;

C. The proposed change is not in conformance with all applicable, officially adopted policies and plans in that the General Plan encourages the preservation of viewsheds and maintaining the integrity of neighborhoods because taller fences may block views and may be out of scale with the surrounding residential architecture;

D. That allowing fences up to eight feet in height will not be compatible with present and potential future uses in the residential single-family zoning district, and, further, a beneficial effect will not be achieved which is obtainable under existing regulations with lower fences.

CITY OF HAYWARD
NEGATIVE DECLARATION

Notice is hereby given that the City of Hayward finds that could not have a significant effect on the environment as prescribed by the California Environmental Quality Act of 1970, as amended will occur for the following proposed project:

I. PROJECT DESCRIPTION:

Text Amendment Application No. PL-2004-0337 – Paige Bennett (Applicant): Request to Amend the Fence Height Regulations within the Zoning Ordinance to Allow an 8-Foot High Fence Where the Ordinance Limits the Fence Height to 6 Feet

II. FINDING PROJECT WILL NOT SIGNIFICANTLY AFFECT ENVIRONMENT:

The proposed project could not have a significant effect on the environment.

FINDINGS SUPPORTING DECLARATION:

1. The proposed project has been reviewed according to the standards and requirements of the California Environmental Quality Act (CEQA) and an Initial Study Environmental Evaluation Checklist has been prepared for the proposed project. The Initial Study has determined that the proposed project could not result in significant effects on the environment.

2. The project will not adversely affect any scenic resources. Fences exceeding 6 feet in height would require review by City staff and notification of adjacent neighbors to ensure that they do not adversely affect any scenic resources.

3. The project will not have an adverse effect on agricultural land.

4. The project will not result in significant impacts related to changes into air quality.

5. The project will not result in significant impacts to biological resources such as wildlife and wetlands.

6. The project will not result in significant impacts to known cultural resources including historical resources, archaeological resources, paleonotological resources, unique topography or disturb human remains.

7. Fences allowed by the proposed text amendment may or may not be located within a "State of California Earthquake Fault Zone", however, any fence exceeding six feet in height will be required to comply with the Uniform Building Code standards to minimize seismic risk due to ground shaking.

ATTACHMENT B

8. The project will not lead to the exposure of people to hazardous materials.

9. The project will meet all water quality standards. Drainage patters and water quality will not be affected.

10. The project is consistent with the policies of the City General Policies Plan, the City of Hayward Design Guidelines and the Zoning Ordinance. The permit process would ensure that scenic views are not blocked and the Design Guidelines would be amended to include standards for fences exceeding 6 feet in height.

11. The project could not result in a significant impact to mineral resources.

12. The project will not have a significant noise impact.

13. The project will not result in a significant impact to public services.

14. The project will not result in significant impacts to traffic or result in changes to traffic patterns or emergency vehicle access.

I. ***PERSON WHO PREPARED INITIAL STUDY:***

Erik J. Pearson, AICP Associate Planner
Dated: September 16, 2004

II. ***COPY OF INITIAL STUDY IS ATTACHED***

For additional information, please contact the City of Hayward, Planning Division, 777 B Street, Hayward, CA 94541-5007, telephone (510) 583-4210, or e-mail erik.pearson@hayard-ca.gov .

DISTRIBUTION/POSTING

- Provide copies to all organizations and individuals requesting it in writing.
- Reference in all public hearing notices to be distributed 20 days in advance of initial public hearing and/or published once in Daily Review 20 days prior to hearing.
- Project file.
- Post immediately upon receipt at the City Clerk's Office, the Main City Hall bulletin board, and in all City library branches, and do not remove until the date after the public hearing.

DEPARTMENT OF COMMUNITY AND ECONOMIC DEVELOPMENT
Development Review Services Division

INITIAL STUDY CHECKLIST FORM

Project title:	**Text Amendment No. 2004-0337– Request to Amend the Fence Height Regulations within the Zoning Ordinance to Allow an 8-Foot High Fence Where the Ordinance Limits the Fence Height to 6 Feet**
Lead agency name and address:	City of Hayward, 777 "B" Street, Hayward, CA 94541-5007
Contact persons and phone numbers:	Erik J. Pearson, Associate Planner (510) 583-4210
Project location:	City-wide
Project sponsor's name and address:	Paige Bennett 313 Bridgecreek Way Hayward, CA 94544
General Plan:	NA
Zoning:	NA
Description of project:	Request to amend the fence height regulations within the zoning ordinance to allow an 8-foot high fence where the ordinance limits the fence height to 6 feet.
Surrounding land uses and setting:	NA
Other public agencies whose approval is required:	None.

ENVIRONMENTAL FACTORS POTENTIALLY AFFECTED:
The environmental factors checked below would be potentially affected by this project, involving at least one impact that is a "Potentially Significant Impact" as indicated by the checklist on the following pages.

☐ Aesthetics	☐ Agriculture Resources	☐ Air Quality
☐ Biological Resources	☐ Cultural Resources	☐ Geology /Soils
☐ Hazards & Hazardous Materials	☐ Hydrology / Water Quality	☐ Land Use / Planning
☐ Mineral Resources	☐ Noise	☐ Population / Housing
☐ Public Services	☐ Recreation	☐ Transportation/Traffic
☐ Utilities / Service Systems	☐ Mandatory Findings of Significance	

DETERMINATION: (To be completed by the Lead Agency)
On the basis of this initial evaluation:

☒ I find that the proposed project COULD NOT have a significant effect on the environment, and a NEGATIVE DECLARATION will be prepared.

☐ I find that although the proposed project could have a significant effect on the environment, there will not be a significant effect in this case because revisions in the project have been made by or agreed to by the project proponent. A MITIGATED NEGATIVE DECLARATION will be prepared.

☐ I find that the proposed project MAY have a significant effect on the environment, and an ENVIRONMENTAL IMPACT REPORT is required.

☐ I find that the proposed project MAY have a "potentially significant impact" or "potentially significant unless mitigated" impact on the environment, but at least one effect 1) has been adequately analyzed in an earlier document pursuant to applicable legal standards, and 2) has been addressed by mitigation measures based on the earlier analysis as described on attached sheets. An ENVIRONMENTAL IMPACT REPORT is required, but it must analyze only the effects that remain to be addressed.

☐ I find that although the proposed project could have a significant effect on the environment, because all potentially significant effects (a) have been analyzed adequately in an earlier EIR or NEGATIVE DECLARATION pursuant to applicable standards, and (b) have been avoided or mitigated pursuant to that earlier EIR or NEGATIVE DECLARATION, including revisions or mitigation measures that are imposed upon the proposed project, nothing further is required.

Signature — September 15, 2004 Date

Erik J. Pearson, AICP Associate Planner — City of Hayward

ENVIRONMENTAL ISSUES:

	Potentially Significant Impact	*Potentially Significant Unless Mitigation Incorporation*	*Less Than Significant Impact*	*No Impact*
I. **AESTHETICS** -- Would the project:				
a) Have a substantial adverse effect on a scenic vista? ***Comment:*** *If taller fencing is permitted, it would require review by City staff and notification of neighboring property owners to ensure scenic vistas are not adversely impacted.*	☐	☐	☒	☐
b) Substantially damage scenic resources, including, but not limited to, trees, rock outcroppings, and historic buildings within a state scenic highway? ***Comment:*** *The project will not damage scenic resources.*	☐	☐	☐	☒
c) Substantially degrade the existing visual character or quality of the site and its surroundings? ***Comment:*** *If taller fencing is permitted, it would require the approval of City staff to ensure that the visual character or quality of the City of Hayward is not degraded.*	☐	☐	☒	☐
d) Create a new source of substantial light or glare which would adversely affect day or nighttime views in the area? ***Comment:*** *The project will not create a new source of light.*	☐	☐	☐	☒
II. **AGRICULTURE RESOURCES**: In determining whether impacts to agricultural resources are significant environmental effects, lead agencies may refer to the California Agricultural Land Evaluation and Site Assessment Model (1997) prepared by the California Dept. of Conservation as an optional model to use in assessing impacts on agriculture and farmland. Would the project:				
a) Convert Prime Farmland, Unique Farmland, or Farmland of Statewide Importance (Farmland), as shown on the maps prepared pursuant to the Farmland Mapping and Monitoring Program of the California Resources Agency, to non-agricultural use? **Comment:** *The project will not affect farmland.*	☐	☐	☐	☒
b) Conflict with existing zoning for agricultural use, or a Williamson Act contract? ***Comment:*** *The project will not affect farmland.*	☐	☐	☐	☒
c) Involve other changes in the existing environment which, due to their location or nature, could result in conversion of Farmland, to non-agricultural use? ***Comment:*** *The project will not affect farmland.*	☐	☐	☐	☒

	Potentially Significant Impact	*Potentially Significant Unless Mitigation Incorporation*	*Less Than Significant Impact*	*No Impact*
III. **AIR QUALITY** -- Where available, the significance criteria established by the applicable air quality management or air pollution control district may be relied upon to make the following determinations. Would the project:				
a) Conflict with or obstruct implementation of the applicable air quality plan? ***Comment:*** *The project will not conflict with or obstruct implementation of the air quality plan.*	☐	☐	☐	☒
b) Violate any air quality standard or contribute substantially to an existing or projected air quality violation? ***Comments:*** *The project will not negatively affect air quality.*	☐	☐	☐	☒
c) Result in a cumulatively considerable net increase of any criteria pollutant for which the project region is non-attainment under an applicable federal or state ambient air quality standard (including releasing emissions which exceed quantitative thresholds for ozone precursors)? ***Comment:*** *The project will not negatively affect air quality.*	☐	☐	☐	☒
d) Expose sensitive receptors to substantial pollutant concentrations? ***Comment:*** *The project will not negatively affect air quality.*	☐	☐	☐	☒
e) Create objectionable odors affecting a substantial number of people? ***Comment:*** *The project will not negatively affect air quality.*	☐	☐	☐	☒
IV. **BIOLOGICAL RESOURCES** -- Would the project:				
a) Have a substantial adverse effect, either directly or through habitat modifications, on any species identified as a candidate, sensitive, or special status species in local or regional plans, policies, or regulations, or by the California Department of Fish and Game or U.S. Fish and Wildlife Service? ***Comment:*** *The project will not adversely affect biological resources.*	☐	☐	☐	☒
b) Have a substantial adverse effect on any riparian habitat or other sensitive natural community identified in local or regional plans, policies, regulations or by the California Department of Fish and Game or US Fish and Wildlife Service? ***Comment:*** *The project will not adversely affect biological resources.*	☐	☐	☐	☒
c) Have a substantial adverse effect on federally protected wetlands as defined by Section 404 of the Clean Water Act (including, but not limited to, marsh, vernal pool, coastal, etc.) through direct removal, filling, hydrological interruption, or other means? ***Comment:*** *The project will not adversely affect biological resources.*	☐	☐	☐	☒

	Potentially Significant Impact	*Potentially Significant Unless Mitigation Incorporation*	*Less Than Significant Impact*	*No Impact*
d) Interfere substantially with the movement of any native resident or migratory fish or wildlife species or with established native resident or migratory wildlife corridors, or impede the use of native wildlife nursery sites? ***Comment:*** *The project will not adversely affect biological resources.*	☐	☐	☐	☒
e) Conflict with any local policies or ordinances protecting biological resources, such as a tree preservation policy or ordinance? ***Comment:*** *The project will not adversely affect biological resources.*	☐	☐	☐	☒
f) Conflict with the provisions of an adopted Habitat Conservation Plan, Natural Community Conservation Plan, or other approved local, regional or state habitat conservation plan? ***Comment:*** *The project will not adversely affect biological resources.*	☐	☐	☐	☒
V. **CULTURAL RESOURCES** -- Would the project:				
a) Cause a substantial adverse change in the significance of a historical resource as defined in §15064.5? ***Comment:*** *The project will not adversely affect historical resources.*	☐	☐	☐	☒
b) Cause a substantial adverse change in the significance of an archaeological resource pursuant to §15064.5? **Comment:** *The project will not adversely affect historical resources.*	☐	☐	☐	☒
c) Directly or indirectly destroy a unique paleontological resource or site or unique geologic feature? ***Comment:*** *The project will not adversely affect historical resources.*	☐	☐	☐	☒
d) Disturb any human remains, including those interred outside of formal cemeteries? ***Comments:*** *The project will not adversely affect historical resources.*	☐	☐	☐	☒
VI. **GEOLOGY AND SOILS** -- Would the project:				
a) Expose people or structures to potential substantial adverse effects, including the risk of loss, injury, or death involving:	☐	☐	☐	☒
i) Rupture of a known earthquake fault, as delineated on the most recent Alquist-Priolo Earthquake Fault Zoning Map issued by the State Geologist for the area or based on other substantial evidence of a known fault? Refer to Division of Mines and Geology Special Publication 42. ***Comment:*** *The project will not be affected by earthquake faults.*	☐	☐	☐	☒
ii) Strong seismic ground shaking? ***Comment:*** *The project will not be affected by seismic ground shaking.*	☐	☐	☐	☒

	Potentially Significant Impact	Potentially Significant Unless Mitigation Incorporation	Less Than Significant Impact	No Impact
iii) Seismic-related ground failure, including liquefaction? ***Comment:*** *The project will not be affected by seismic-related ground failure.*	☐	☐	☐	☒
iv) Landslides? ***Comment:*** *The project will not be affected by landslides.*	☐	☐	☐	☒
b) Result in substantial soil erosion or the loss of topsoil? ***Comment:*** *The project will not cause soil erosion.*	☐	☐	☐	☒
c) Be located on a geologic unit or soil that is unstable, or that would become unstable as a result of the project, and potentially result in on- or off-site landslide, lateral spreading, subsidence, liquefaction or collapse? ***Comment:*** *Fences built on unstable soil would not likely cause on- or off-site landslide, lateral spreading, subsidence, liquefaction or collapse.*	☐	☐	☒	☐
d) Be located on expansive soil, as defined in Table 18-1-B of the Uniform Building Code (1994), creating substantial risks to life or property? ***Comment:*** *If a fence is constructed on expansive soil, it would not create substantial risks to life or property.*	☐	☐	☐	☒
e) Have soils incapable of adequately supporting the use of septic tanks or alternative wastewater disposal systems where sewers are not available for the disposal of wastewater? ***Comment:*** *The project would not create any wastewater.*	☐	☐	☐	☒
VII. **HAZARDS AND HAZARDOUS MATERIALS** - Would the project:				
a) Create a significant hazard to the public or the environment through the routine transport, use, or disposal of hazardous materials? ***Comment:*** *The project does not involve the transport, use, or disposal of hazardous materials.*	☐	☐	☐	☒
b) Create a significant hazard to the public or the environment through reasonably foreseeable upset and accident conditions involving the release of hazardous materials into the environment? ***Comment:*** *See VII a.*	☐	☐	☐	☒
c) Emit hazardous emissions or handle hazardous or acutely hazardous materials, substances, or waste within one-quarter mile of an existing or proposed school? ***Comment:*** *See VII a.*	☐	☐	☐	☒

	Potentially Significant Impact	Potentially Significant Unless Mitigation Incorporation	Less Than Significant Impact	No Impact
d) Be located on a site which is included on a list of hazardous materials sites compiled pursuant to Government Code Section 65962.5 and, as a result, would it create a significant hazard to the public or the environment? ***Comment:*** *A fence constructed on a site containing hazardous materials would not create a significant hazard to the public or the environment.*	☐	☐	☐	☒
e) For a project located within an airport land use plan or, where such a plan has not been adopted, within two miles of a public airport or public use airport, would the project result in a safety hazard for people residing or working in the project area? ***Comment:*** *The project would not result in a safety hazard for people residing or working in the project area.*	☐	☐	☐	☒
f) For a project within the vicinity of a private airstrip, would the project result in a safety hazard for people residing or working in the project area? ***Comment:*** *The project would not be located in the vicinity of a private airstrip.*	☐	☐	☐	☒
f) Impair implementation of or physically interfere with an adopted emergency response plan or emergency evacuation plan? ***Comment:*** *the project would not interfere with an adopted emergency response plan or emergency evacuation plan.*	☐	☐	☐	☒
g) Expose people or structures to a significant risk of loss, injury or death involving wildland fires, including where wildlands are adjacent to urbanized areas or where residences are intermixed with wildlands? ***Comment:*** *Fences exceeding 6 feet in height may make it more difficult for firefighters to fight a wildland fire.*	☐	☐	☒	☐
VIII. **HYDROLOGY AND WATER QUALITY** -- Would the project:				
a) Violate any water quality standards or waste discharge requirements? ***Comment:*** *The project would have no impact on water quality, groundwater, drainage patterns or flooding.*	☐	☐	☐	☒
b) Substantially deplete groundwater supplies or interfere substantially with groundwater recharge such that there would be a net deficit in aquifer volume or a lowering of the local groundwater table level (e.g., the production rate of pre-existing nearby wells would drop to a level which would not support existing land uses or planned uses for which permits have been granted)? ***Comment:*** *See VIII(a).*	☐	☐	☐	☒

	Potentially Significant Impact	Potentially Significant Unless Mitigation Incorporation	Less Than Significant Impact	No Impact
c) Substantially alter the existing drainage pattern of the site or area, including through the alteration of the course of a stream or river, in a manner which would result in substantial erosion or siltation on- or off-site? ***Comment:*** *See VIII(a).*	☐	☐	☐	☒
d) Substantially alter the existing drainage pattern of the site or area, including through the alteration of the course of a stream or river, or substantially increase the rate or amount of surface runoff in a manner which would result in flooding on- or off-site? ***Comment:*** *See VIII(a).*	☐	☐	☐	☒
e) Create or contribute runoff water which would exceed the capacity of existing or planned stormwater drainage systems or provide substantial additional sources of polluted runoff? ***Comment:*** *See VIII(a).*	☐	☐	☐	☒
f) Otherwise substantially degrade water quality? ***Comment:*** *See VIII a.*	☐	☐	☐	☒
g) Place housing within a 100-year flood hazard area as mapped on a federal Flood Hazard Boundary or Flood Insurance Rate Map or other flood hazard delineation map? ***Comment:*** *See VIII(a).*	☐	☐	☐	☒
h) Place within a 100-year flood hazard area structures which would impede or redirect flood flows? ***Comment:*** *See VIII g.*	☐	☐	☐	☒
i) Expose people or structures to a significant risk of loss, injury or death involving flooding, including flooding as a result of the failure of a levee or dam? ***Comment:*** *See VIII(a).*	☐	☐	☐	☒
j) Inundation by seiche, tsunami, or mudflow? ***Comment:*** *See VIII(a).*	☐	☐	☐	☒
IX. **LAND USE AND PLANNING** - Would the project:				
a) Physically divide an established community? ***Comment:*** *Taller fences may limit interaction between neighbors within a community.*	☐	☐	☒	☐

	Potentially Significant Impact	*Potentially Significant Unless Mitigation Incorporation*	*Less Than Significant Impact*	*No Impact*
b) Conflict with any applicable land use plan, policy, or regulation of an agency with jurisdiction over the project (including, but not limited to the general plan, specific plan, local coastal program, or zoning ordinance) adopted for the purpose of avoiding or mitigating an environmental effect? ***Comment:*** *The text amendment would not conflict with the General Plan.*	☐	☐	☐	☒
c) Conflict with any applicable habitat conservation plan or natural community conservation plan? ***Comment:*** *The text amendment would not conflict with any habitat conservation plan or natural community conservation plan.*	☐	☐	☐	☒
X. **MINERAL RESOURCES** – Would the project:				
a) Result in the loss of availability of a known mineral resource that would be of value to the region and the residents of the state? ***Comment:*** *The project will not affect mineral resources.*	☐	☐	☐	☒
b) Result in the loss of availability of a locally important mineral resource recovery site delineated on a local general plan, specific plan or other land use plan? ***Comment:*** *See X a.*	☐	☐	☐	☒
XI. **NOISE** - Would the project result in:				
a) Exposure of persons to or generation of noise levels in excess of standards established in the local general plan or noise ordinance, or applicable standards of other agencies? ***Comment:*** *The results of the text amendment would produce no noise.*	☐	☐	☐	☒
b) Exposure of persons to or generation of excessive groundborne vibration or groundborne noise levels? ***Comment:*** *See XI a.*	☐	☐	☐	☒
c) A substantial permanent increase in ambient noise levels in the project vicinity above levels existing without the project? ***Comment:*** *See XI a*	☐	☐	☐	☒
d) A substantial temporary or periodic increase in ambient noise levels in the project vicinity above levels existing without the project? ***Comment:*** *See XI a*	☐	☐	☐	☒

	Potentially Significant Impact	Potentially Significant Unless Mitigation Incorporation	Less Than Significant Impact	No Impact
e) For a project located within an airport land use plan or, where such a plan has not been adopted, within two miles of a public airport or public use airport, would the project expose people residing or working in the project area to excessive noise levels? ***Comment:*** *See IX a.*	☐	☐	☐	☒
f) For a project within the vicinity of a private airstrip, would the project expose people residing or working in the project area to excessive noise levels? ***Comment:*** *The text amendment would not expose people to excessive noise levels.*	☐	☐	☐	☒
XII. **POPULATION AND HOUSING** -- Would the project:				
a) Induce substantial population growth in an area, either directly (for example, by proposing new homes and businesses) or indirectly (for example, through extension of roads or other infrastructure)? ***Comment:*** *The proposed project would have no impact on population growth, nor would it displace people or housing.*	☐	☐	☐	☒
b) Displace substantial numbers of existing housing, necessitating the construction of replacement housing elsewhere? ***Comment:*** *See XII a.*	☐	☐	☐	☒
c) Displace substantial numbers of people, necessitating the construction of replacement housing elsewhere? ***Comment:*** *See XII a.*	☐	☐	☐	☒
XIII. **PUBLIC SERVICES**				
Would the project result in substantial adverse physical impacts associated with the provision of new or physically altered governmental facilities, need for new or physically altered governmental facilities, the construction of which could cause significant environmental impacts, in order to maintain acceptable service ratios, response times or other performance objectives for any of the public services:				
a) Fire protection? **Comment:** The proposed project will have no effect upon, government services in fire and police protection, maintenance of public facilities, including roads, and in other government services.	☐	☐	☐	☒
b) Police protection? ***Comment:*** *See XIII a.*	☐	☐	☐	☒
c) Schools? ***Comment:*** *See XIII a.*	☐	☐	☐	☒
d) Parks? **Comment:** *See XIII a.*	☐	☐	☐	☒

	Potentially Significant Impact	*Potentially Significant Unless Mitigation Incorporation*	*Less Than Significant Impact*	*No Impact*
e) Other public facilities? ***Comment:*** *No other public facilities will be significantly impacted.*	☐	☐	☐	☒
XIV. **RECREATION** --				
a) Would the project increase the use of existing neighborhood and regional parks or other recreational facilities such that substantial physical deterioration of the facility would occur or be accelerated? ***Comment:*** *The text amendment will have no affect on parks or recreational facilities.*	☐	☐	☐	☒
b) Does the project include recreational facilities or require the construction or expansion of recreational facilities which might have an adverse physical effect on the environment? ***Comment:*** *See XIV a.*	☐	☐	☐	☒
XV. **TRANSPORTATION/TRAFFIC** -- Would the project:				
a) Cause an increase in traffic which is substantial in relation to the existing traffic load and capacity of the street system (i.e., result in a substantial increase in either the number of vehicle trips, the volume to capacity ratio on roads, or congestion at intersections)? ***Comment:*** *The text amendment will have no affect on traffic of any kind.*	☐	☐	☐	☒
b) Exceed, either individually or cumulatively, a level of service standard established by the county congestion management agency for designated roads or highways? ***Comment:*** *See XV a.*	☐	☐	☐	☒
c) Result in a change in air traffic patterns, including either an increase in traffic levels or a change in location that results in substantial safety risks? ***Comment:*** *See XV a.*	☐	☐	☐	☒
d) Substantially increase hazards due to a design feature (e.g., sharp curves or dangerous intersections) or incompatible uses (e.g., farm equipment)? ***Comment:*** *See XV a.*	☐	☐	☐	☒
e) Result in inadequate emergency access? ***Comment:*** *The text amendment will not affect emergency access.*	☐	☐	☐	☒
f) Result in inadequate parking capacity? ***Comment:*** *The text amendment will not affect parking.*	☐	☐	☐	☒

	Potentially Significant Impact	*Potentially Significant Unless Mitigation Incorporation*	*Less Than Significant Impact*	*No Impact*
g) Conflict with adopted policies, plans, or programs supporting alternative transportation (e.g., bus turnouts, bicycle racks)? ***Comment:*** *The project would not conflict with adopted policies supporting alternative transportation.*	☐	☐	☐	☒
XVI. **UTILITIES AND SERVICE SYSTEMS** - Would the project:				
a) Exceed wastewater treatment requirements of the applicable Regional Water Quality Control Board? ***Comment:*** *The project will not create wastewater.*	☐	☐	☐	☒
b) Require or result in the construction of new water or wastewater treatment facilities or expansion of existing facilities, the construction of which could cause significant environmental effects? ***Comment:*** *See XVI a.*	☐	☐	☐	☒
c) Require or result in the construction of new storm water drainage facilities or expansion of existing facilities, the construction of which could cause significant environmental effects? ***Comment:*** *The project will not affect storm water drainage.*	☐	☐	☐	☒
d) Have sufficient water supplies available to serve the project from existing entitlements and resources, or are new or expanded entitlements needed? ***Comment:*** *The project will have no effect on water supplies.*	☐	☐	☐	☒
e) Result in a determination by the wastewater treatment provider, which serves or may serve the project that it has adequate capacity to serve the project's projected demand in addition to the provider's existing commitments? ***Comment:*** *See XVI a.*	☐	☐	☐	☒
f) Be served by a landfill with sufficient permitted capacity to accommodate the project's solid waste disposal needs? ***Comment:*** *The project will not create solid waste.*	☐	☐	☐	☒
g) Comply with federal, state, and local statutes and regulations related to solid waste? ***Comment:*** *See XVI f.*	☐	☐	☐	☒
XVII. **MANDATORY FINDINGS OF SIGNIFICANCE --**				
a) Does the project have the potential to degrade the quality of the environment, substantially reduce the habitat of a fish or wildlife species, cause a fish or wildlife population to drop below self-sustaining levels, threaten to eliminate a plant or animal community, reduce the number or restrict the range of a rare or endangered plant or animal or eliminate important examples of the major periods of California history or prehistory?	☐	☐	☐	☒

	Potentially Significant Impact	*Potentially Significant Unless Mitigation Incorporation*	*Less Than Significant Impact*	*No Impact*
b) Does the project have impacts that are individually limited, but cumulatively considerable? ("Cumulatively considerable" means that the incremental effects of a project are considerable when viewed in connection with the effects of past projects, the effects of other current projects, and the effects of probable future projects)?	☐	☐	☐	☒
c) Does the project have environmental effects which will cause substantial adverse effects on human beings, either directly or indirectly?	☐	☐	☐	☒

My request to the City of Hayward is to amend the currently accepted 8' fencing in section 10-1.245, Item F, to ALL residential properties in the City of Hayward not just those that fit the description of Item F, section 2. I would further ask that the City of Hayward amend the ordinance to accept standardized fencing within the City (ie only certain materials, styles of fence could be used) and that the City of Hayward then regulate ALL fencing within City limits.

This system is already in place in the City of Fremont. This system gives residents the option of going higher if needed (due to privacy issues, safety, security, etc.) without distorting the overall look of the City. Currently Hayward has dozens of 8' fences littering our streets with materials made from basic plywood to bamboo sheets. It is unfair to residents to allow 8' fencing of miscellaneous material to be unregulated while attempting to enforce 6' fencing elsewhere within the City. Following the Fremont method would standardize the look of fencing in our City. Yes you will have some higher and some lower based upon individual homeowner needs but you will have consistency in form and material. The original ordinance was written 50 years ago and should be updated to reflect our current living conditions and the needs of our community today.

I have attached a spreadsheet which outlines several Cities in the County of Alameda who allow fencing in excess of 6'. I have also attached examples of the City of Fremonts website which includes very specific instruction on fencing for their residents. Lastly I have included some pictures taken recently of several of the unregulated 8' fences found in South Hayward.

I recently collected some statistical data with regard to fencing in our City. I mapped out a 1 mile radius around my home and walked the area counting the number of homes with fencing in excess of 6'. I purposefully left out the properties that were allowed to have 8' fencing. Within a 1 mile radius of my home I located 26 properties violating the current ordinance. given the 61 square miles that encompass Hayward and given that I only looked at a 1 mile radius there are potentially hundreds of homeowners either knowingly or unknowingly violating the ordinance at it is currently written. Updating this ordinace to a 2004 standard (such as those accepted in Fremont and Pleasanton) will help to improve the overall appearance and character of the City of Hayward.

ATTACHMENT C

*Non-corner lot
*No intersection

Alameda County
Fence Height per City

*Setback not an issue

Alameda	Front & Side Street Yard = 3 feet
	Side & Rear Yard = 6 feet
	These barrier heights may be increased an additional two feet with 50%
	use of see-through style fencing, subject to the approval of the
	Planning and Building director.
	*Verification via website
Albany	Front & Side Street Yard = 3 feet
	Side & Rear Yard = 6 feet
	*Verification via website
Berkeley	Sec 23D.08.060 Fences & Other Accessory Structures
	No fence or other unenclosed accessory structure located on a property
	line or within the required yard area for a main building set forth in each
	Residential Districts provisions may exceed 6' in height at any point
	(or, in the case of the ES-R District four (4) feet), unless so authorized
	by an AUP (Administrative Use Permit).
	*Verification via website
Castro Valley	Front & Side Street Yard = 4 feet
	Side & Rear Yard = 6 feet
	Variance applications accepted & granted up to 12' dependant upon
	reason for the variance. Variances are handled by Alameda County
	*Verification via telephone with Alameda Planning Dept.
Dublin	Title 8 of the city of Dublin Municipal Code
	Front & Side Street Yard = 4 feet
	Side & Rear Yard = 6 feet
	Outside of required yard = 8 feet
	A fence or wall in a Side Yard, Street Side Yard, or Back Yard in a
	residential zoning district may be extended an additional 2 feet
	(8 feet total height) through the use of a framed wooden lattice capable
	of admitting not less than 50% light. Solid Plexiglass inserts are not
	permitted.
	*Verification via website
Emeryville	Front & Side Street Yard = 4.5 feet
	Side & Rear Yard = 6 feet
	City of Emeryville prefers open face fencing. They have a wrought iron grant program for
	residents to encourage new front fencing as well as a concrete buy back program to
	encourage residents to remove parking space from home fronts & replace with
	landscaping.
	*Verification via telephone with Emeryville Planning Dept.
Fremont	Sec. 8-22208 Fences and hedges - General height limitations
	Front & Side Street Yard = 4 feet
	Side & Rear Yard = 8 feet
	Fremont permit section advises two styles of fence to choose from for
	the builder. Straight board to board Redwood or Redwood board to board
	with an incorporated lattice topper.

	Hedges used as screening elements in the side and rear yards up to 12'
	*Verification via website
Hayward	Sec. 10-1.235 Height Limit
	Front & Side Street Yard = 4 feet
	Side & Rear Yard = 6 feet
	Sec. 10-1.245 Additional Standards
	f. Fences, Hedges and Walls
	Where the rear or side yard is contiguous to commercially or industrially
	developed or zoned land, freeway, fllod control channels, areterial streets,
	parking lots, or similar use, a maximum of 8-foot-high fence or wall
	may be permitted by the Planning Director
	*Verification via website
Livermore	Front & Side Street Yard = 3 feet
	Side & Rear Yard = 6 feet
	8' permitted abutting a truck route with a conditional use permit
	No such fence shall be located within 20' of any driveway
	Fences shall be subject to design review approval
	*Verification via website
Newark	Front & Side Street Yard = 3 feet
	Side & Rear Yard = 6 feet
	*Verification via phone call with Newark Planning Dept.
Oakland	Front & Side Street Yard = 3.5 to 6 feet (depending upon rear lot line)
	Side & Rear Yard = 6 to 8 feet (depending upon rear lot line)
	The City of Oakland has begun a comprehensive revision of its
	Planning & Zoning regulations to make them consistent with the new
	General Plan, which the City adopted in March 1998. The zoning
	regulations also need to be streamlined and tailored to reflect the
	community needs. The current zoning regulations in the Oakland
	Planning Code (Oakland Municipal Code, Title 17) are over 35 years old
	and, because of piecemeal amendments, have become cumbersome to
	use. The new Planning Code will be an updated, more user-friendly
	framework for reviewing and approving development projects.
	*Verification via website
Piedmont	17.17.1 General Rule Fences, Retaining Walls, Trellises & Hedges
	A retaining wall exceeding three feet in height, a fence
	or trellis exceeding six feet in height, and any combination of fence, retaining wall
	and trellis exceeding six feet in height shall require design review under section
	17.20 of this Code prior to construction. In addition, any retaining wall exceeding
	30 inches in height and any fence, trellis or combination (no matter how high)
	which is located within a front yard setback, a street side yard setback, or a rear
	yard setback of a through lot shall require design review by the Planning Commission
	under section 17.20 of this Code prior to construction.
	*Verification via City of Piedmont Municipal Code Chapter 17 mailed to me
Pleasanton	18.84.080 Front Yards - Requirements & Exceptions

	Front & Side Street Yard = 3.5 feet
	Higher decorative structrues or planting screens incorporated into an identifiable
	landscaping scheme may be located in a required front yard, provided that:
	No such structure or screen shall exceed 6' in height except decorative arched
	gateways, which may be a maximum of 8' in height
	18.84.090 Side & Rear Yards - Requirements & Exceptions
	Fences, walls and hedges greater than 6' but not over 8' in height may occupy a
	required side or rear yard upon approval by the zoning administrator.
	Application is made, design reviewed, public hearing within 40 days of submission
	w. notification by mail no less than 10 days prior to hearing date.
	Upon comclusiong of public hearing the zoning administrator may approve,
	conditionally approve, or deny the application. No application shall be approved,
	as applied for or as conditioned, unless the zoning administrator finds the the application
	a. Conforms to the objectives of this title;
	b. Assists in providing privacy, in attenuating sound transmission, and/or in reducing
	other annoyance from neighboring properties; and
	c. Does not significantly impact upon the aesthetics and safety of the neighborhood
	nor the light and air to all affected properties.
	* Verification via website
San Leandro	Community Compliance - Fences
	The height and location of fences is regulated. In general, rear yard fences cannot exceed
	7 feet and fences built in the front yard cannot exceed 3 feet in height. Front yard fences
	cannot be built in the public right of way without first obtaining an encroachment permit
	from the City. Property lines do not always begin where the sidewalk ends. In most cases
	the property line is anywhere from 1 to 3 feet in from the inside edge of the sidewalk.
	*Verification via website
San Lorenzo	Front & Side Street Yard = 4 feet
	Side & Rear Yard = 6 feet
	Variance applications accepted & granted dependent upon the
	reason for the variance. Variances handled by Alameda County
	*Verification via telephone with San Lorenzo Planning Dept.
Union City	18.32.040 Walls, fences, and hedges
	Front & Side Street Yard = 3 feet
	Side & Rear Yard = 6 feet
	Height Exception. Fences a maximum of eight feet may be allowed in the required rear
	yard or in the required interior side yard from rear property line to the front setback
	when the yard abuts a flood control channel, a railroad, a park, a licensed residential
	care or health facility, a schol or a child care center.

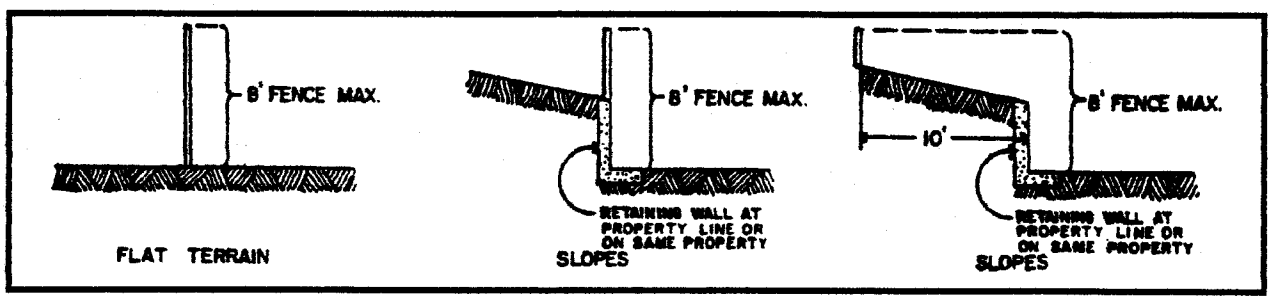

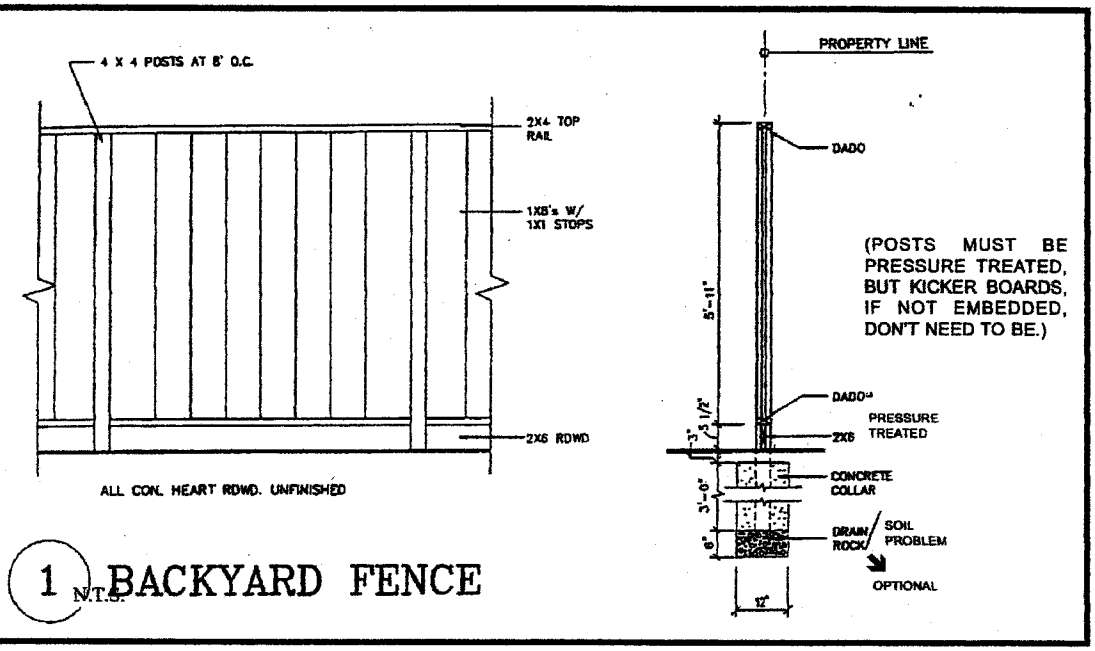

1 N.T.S. BACKYARD FENCE

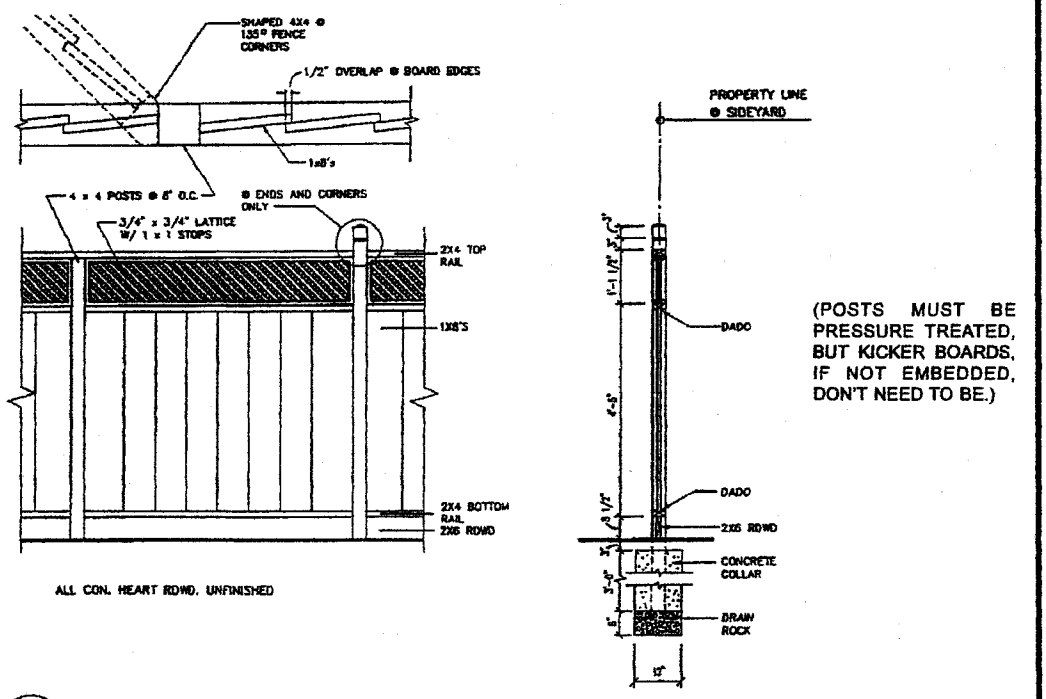

2 N.T.S. DECORATIVE FENCE

BS-064/ss – 5/02

ATTACHMENT D

DUE TO THE LENGTH OR COLOR OF THE REFERENCED EXHIBIT, IT HAS BEEN ATTACHED AS A SEPARATE LINK.

Erik Pearson

From: Jesus Armas
Sent: Thursday, July 08, 2004 8:11 AM
To: 'jwkyle6@comcast.net'; Erik Pearson
Cc: jesus.armas@hayward-ca.gov.
Subject: RE: eight foot fence.

John:
I'm aware the City has received an application from a person who resides in the Twin Bridges subdivision requesting a modification to City regulations to allow 8-foot fences. If I'm not mistaken, I think this is the same person who has an 8-foot fence, and was required to remove it after the Council declined to allow it to remain. (The Council upheld an appeal filed by a neighbor after the Planning Commission originally granted approval.) As a change to the zoning ordinance, it will first go to the Planning Commission, and then the City Council.

-----Original Message-----
From: jwkyle6@comcast.net [mailto:jwkyle6@comcast.net]
Sent: Wednesday, July 07, 2004 10:42 PM
To: Erik Pearson
Cc: jesus.armas@hayward-ca.gov.
Subject: eight foot fence.

Today, July 7, 2004 the Post Office delivered a notice about concern for 8 foot fences.

Metered mail date was June 22, 2004 but PO cancellation date is July 6th. Will complain to Postal Inspectors about lousy service.

8 foot fences? Not on your life should you bet on that idea! See home on Lucia St. East side, about one possibly two lots south of Sueirro..... Concrete block wall 12 blocks, each eight inches plus cap block sits on foundation wall visibly above grade..... 8 foot six inches, give or take an inch.

Same street, opposite end. See overseas ship box used for storage with shack at rear...construction materials on top of box, all in use for business operated out of home! Done with a permit?

There was a beef in the highlands about a guy on a corner lot who had masonry pilons (columns) separeating an intended decorative iron fence, above allowable height along exterior property line of a corner lot. City required him to reduce heights. Yet, on Nevada Rd., east side, 150 + feet south of Longwood we have something similar which violates code. Again on Nevada Rd. east side, 200 feet + south of Lebanon, we have wrought iron fence at front properyty line well above four feet..... both busy streets.

See Womack home with famous roof of composition roll as 'get even' cover for refusal to permit standing rib sheet metal, painted blue, with plastic gromet fasteners approved by planning commission but turned down by Council. Was composition roll

ATTACHMENT F

applied with permit? I don't think so, because last time I looked the guy hadn't done rear elevation except to use boards to hold down plastic.My report to city was that we could not inspect rear due to rules against violating privacy... entirely missed was the use of composition roll, applied with poor craftsmanship! Dumb comment by Commissioner Halliday when she voted to approve metal roof was, 'let's try it to see how we like it !'

Several add on home extensions were observed by me in distant past and reported due to violation of code. In one instance the roof framing was so poor that I would hope never to see fire personnel standing of that roof. Home extension enclosed rear elevation so that bedroom windows were enclosed in violation of both building and health/safety codes.. Complaint to building inspector was met with the damndest response I ever read.

So, what is the point of creating codes and establishing zoning regulations if there will be no enforcement?

Demographics are such that perceptive ability of citizenry is quite low...you would have to put building inspectors into cars. Masny of them do not understand what they see from windshield inspection and< God forbid that they should violate privacy.

Once suggested to our Mayor that we institute building inspection on any residence, excluging condominiums or puds, that is sold and that certificate of occupancy be re-issued on completion of inspection. Violations to be listed and handed to realtor (broker and sakles person), homeowner. The procedure would apply to any home older than 10 years.

Aside from lack of intestinal fortitude wrought by ignorance of fact that the procedure was in effect, and highly useful where FHA financing was required. Since FHA loans were typical in homes most affected by 'bootleg' improvements it was highly useful for purposes of city which was engaged in the practice (conivance) with FHA.

It ws a highly useful arrangement used through 1970's: Too much expense to establish the idea independently? No, because fee would be applicable. However, such a program would have long range benefits which I will not bore you with in this writing.

John W. Kyle

Erik Pearson

From: WOWINBLAD@aol.com
Sent: Tuesday, June 29, 2004 10:14 PM
To: Erik Pearson
Subject: 8 foot fences for Hayward

Yes, eight foot fences will allow all residents to
Shield, and be shielded from bad views.
Also, I believe crime may be prevented.
Please note my support for this application.

Thank you,
Wade Winblad
25528 & 25524 university court
Hayward, CA 94542

Erik Pearson

From: Donna Sumares [dlsumares@pacbell.net]
Sent: Thursday, June 24, 2004 5:25 PM
To: Erik Pearson
Cc: Barbara Rutledge; Carl Castro; Marie Lazaro; FABS Inc
Subject: PL-2004-0337TA (Paige Bennett, applicant)

As President of the Briarwood Homeowners Association I must agree with the applicant that the Zoning Ordinance should be changed from 6 feet to 8 feet. Our homeowners have been asking to have a fence at the front of our complex be constructed in the future but we do not feel that a fence of 6 feet is adequate for our needs. With a 8 foot high fence we feel that we would have an adequate fence.

-Donna Sumares, President
Briarwood Homeowners Association
200 Briarwood Drive
Hayward, Ca 94544
(510)538-0866

Erik Pearson

From: WAT018@aol.com

Sent: Friday, June 25, 2004 3:23 PM

To: Erik Pearson

Subject: 8 foot fence

I believe the 8 foot fence is desirable for many reasons, I just replaced one side of my fence and part of the rear, I wanted the 8' but found out about the limit. Please keep me informed on any action on this issue that is going to take place in the future.

Thanks
Don McVicker, Warren/Curtis homeowners.
28449 Pacific St. Hayward, Ca 94544
510-582-3129

Erik Pearson

From: George Dimic [gdimic@accoes.com]
Sent: Monday, June 28, 2004 6:00 AM
To: Erik Pearson
Subject: PL-2004-0337 TA, 8 foot Fence

Hi Erik,
I reviewed the proposed Zoning Ordinance change with the Board members of the Old Highland Homeowners Association and the consensus of the opinions is that we support the change from 6' to 8' height, but would like to see a permit (over the counter) requirement for fences in excess of 6'.

Please let me know if we can be of further assistance.
Regards, George

George Dimic, PE
ACCO
Ph. 510.346.4399
Fx. 510.347.1317
email: gdimic@accoes.com

Erik Pearson

From: GRANDVIEW REALTY [GRANDVIEWREALTY@COMCAST.NET]
Sent: Thursday, June 24, 2004 3:41 PM
To: George Dimic; brrway@aol.com; Catballoue22@aol.com; hsteelman@aol.com; Savillan1 @aol.com; Dakruser@pacbell.net
Cc: Erik Pearson
Subject: Re: Zoning Ordinance Change - Fence height

8 foot fences are just fine with me

Rob Simpson
----- Original Message -----
From: "George Dimic" <gdimic@accoes.com>
To: <brrway@aol.com>; <Catballoue22@aol.com>; <hsteelman@aol.com>; <Savillan1@aol.com>; <grandviewrealty@comcast.net>; <Dakruser@pacbell.net>
Cc: <Erik.pearson@hayward-ca.gov>
Sent: Thursday, June 24, 2004 9:53 AM
Subject: Zoning Ordinance Change - Fence height

Hello Board members,
I received a City Notice from Erik J Pearson, AICP at the Planning Division, soliciting our input on the proposed amendment to change the Zoning Ordinance from the current 6' fence height limitation to the proposed 8' height. Our input is required by 6.29.04 and I will gladly respond, but need your opinions.

My thought is that the fence height change to 8' is acceptable (I highly endorse it) but would like the City to require a permit (currently permits are not required for 4' high front/side yard fences and 6' high side/back
fences) for fences beyond 6' thus maintaining some sort of overall control and aesthetic consistency. Please let me know ASAP your opinion(s) so that I can respond 'democratically'. Thanks, George PS - Don't forget Board meeting on 7.6.04 at Rob's house.

George Dimic, PE
ACCO
Ph. 510.346.4399
Fx. 510.347.1317
email: gdimic@accoes.com

Erik Pearson

From: RSakai538@aol.com
Sent: Wednesday, June 23, 2004 3:40 PM
To: Erik Pearson
Subject: 8 foot fences

Erik:

I think the zoning ordnance should be changed to allow fences up to 8' high instead of 6'. I don't think the current 6' height has any advantages over the 8' fence.

Robert Sakai
Hayward Highland Neighorhood Task Force
Whitman-Mocine Neighborhood Task Force

2/28/04

Erik Pearson AICP
Ref. PL-20040337 TA

There are lot of one story homes in the city They aren't that tall.
Even two story houses have their windows on the first level about the hight as one story.
A 6' fence comes up to about half way up the window. an 8' fence would be 3/4 of the window hight, and air flow would be reduced, Side yard plantings would only allow for shade plants and that is with a 5' setback on each property
It would make each house look like a fortress
Darked yards at night possibly of mold + dry rot
The city can't afford to isolate neighbors

Comm city Pres. can't see ver a 8 ft fence for cars parked in side yards + junk
on dark wet days you need as much light as possible
Thanks for your time

Deanna Bogue
729 Poinciana St
(510) 782-2824

RECEIVED

JUN 29 2004

PLANNING DIVISION

June 28, 2004

Erik J. Pearson, AICP
Associate Planner
City of Hayward, Planning Division
777 "B" Street Hayward, CA 94541

Reference: PL-2004-0337 TA

Dear Erik Pearson,

I would like to offer a few suggestions concerning the proposed fence amendment.

First of all, I think that when someone requests an 8 foot fence, that a condition be applied if possible, that the fence be screened by vegetation so as to not have it be a prominent blank fence just waiting for graffiti artists to come along.

Secondly, the fence ordinance should have a distinction between residential usage and commercial usage. Perhaps if possible, the 8 foot fence should only apply to the rear yards for residential zoning as I believe this area is of primary concern to many people. A terraced or stepped look could begin along side of the property beginning at the corner line of the house itself and no 8 foot fence could go beyond the front portion of the home. This would prevent a "boxy" look from the street. However, for commercial purposes, their needs are often vastly different, and require a different set of conditions. In their case, such as a swimming pool, safety is of primary concern and the fence absolutely needs to be higher. However, this is a perfect situation where vegetation can adequately conceal the whole fence and not be an imposition on the neighborhood.

In closing, I feel that because so many of our homes are so near to one another, especially with the newer homes being built today, privacy becomes a very important issue for homeowners. Therefore, by having additional screening allows for more suitable retreats to the backyard area. I truly believe that creative planning solutions can be reached with proper and decorative design guidelines, therefore, I am in support of the proposed fence amendment with a few conditions applied.

Thank you for the opportunity to share my comments.

Sincerely,

Holly Rogers

Holly Rogers
31730 Chicoine Av.
Hayward, CA 94544
(510) 487-4461

Erik Pearson

From: ken.price@comcast.net
Sent: Wednesday, June 23, 2004 4:00 PM
To: Erik Pearson
Subject: Zoning Ordinance Change From Six Feet to Eight Feet High Fencing

Mr. Pearson:

I am opposed to the change. Eight feet is too high for neighborhoods. There are some folks who have exceptions and they need to plead their case for the extension.

I read about the Lady with the Dogs and I think the real questions is; should she have Dogs in the back yard which require the additional two feet?

Ken Price

RECEIVED

JUN 2 9 2004

PLANNING DIVISION

TREEVIEW SWIMMING CLUB, INC.
301 Gresel Street
Hayward, CA 94544
(510) 471-5242

June 25, 2004

Erik J. Pearson, AICP
Associate Planner
City of Hayward, Planning Division
777 "B" Street Hayward, CA 94541

Reference: PL-2004-0337 TA

Dear Erik Pearson,

Thank you for the opportunity to comment on the proposed request to amend the fence height regulations of the Zoning Ordinance allowing up to 8-foot fences city-wide where the ordinance limits the fence height to 6 feet.

We at the Treeview Swim Club do support such an amendment as we have experienced numerous problems over the years with teens being able to scale our fence during the day and in the evening. For over 40 years our club has always put the safety of our patrons first, however being able to monitor the activities of unwanted violators sometimes creates a very difficult situation for all concerned. We find that a 6' limit does not serve our needs adequately. Therefore, we do support an amendment to the current fence ordinance.

We also understand that aesthetics is certainly and issue with fences, however we feel that responsible citizens will certainly manage aesthetics as an 8 foot fence can be properly blended into the landscaping of a home or business. Tall fences can be positive, especially when screened with attractive plantings.

Safety should always be the first concern and we would encourage you to please consider passing the proposed amendment as it's vital to keep our city and citizens safe. If by chance a new ordinance is not supported by staff, planning or council, we would then urge you to be flexible with requests for variances based on safety issues.

Thank you for considering this proposal.

Sincerely,

The Treeview Swimming Club Board of Directors and
Holly Rogers, Office Manager