CITY OF
HAYWARD
HEART OF THE BAY

Council Sustainability Committee

June 18, 2015

Table of Contents

Agenda 2

Meeting Minutes

Minutes 4

Streamlined Permitting and Reduced Fees for Small Residential Solar Energy Systems (per AB 2188)

Staff Report 11

Attachment I - Draft Ordinance 14

Attachment II - Handout for Solar Panel 18

Update on Community Choice Aggregation (“East Bay Community Energy”)

Staff Report 22

Attachment I - Roster 27

Update on Emergency Water Conservation Regulations

Staff Report 28

Attachment I - Contingency Plan 36

Attachment II - Executive Order. 39

Attachment III - State Regulations 46

Water Pollution Control Facility (WPCF) Clean and Renewable Energy

Staff Report 51

Attachment I. 55

Property Assessed Clean Energy (PACE) – Consideration of New Programs

Staff Report 56

Attachment I - Comparison Table 64

Attachment II - Loss Reserve Program 65

Water Conservation, Efficiency, Outreach, and Rebate Programs

Staff Report 66

Public Litter Containers – Locations for New Containers throughout City

Staff Report 72

Attachment I - Map 75

Suggested Agenda Topics for September 2015

Agenda Topics 77

CITY OF HAYWARD
HEART OF THE BAY

CITY COUNCIL SUSTAINABILITY COMMITTEE MEETING
Thursday, June 18, 2015
Conference Room 2A
4:00 – 6:30 PM

CALL TO ORDER

ROLL CALL

PUBLIC COMMENTS: *(The Public Comment section provides an opportunity to address the City Council Committee on items not listed on the agenda. The Committee welcomes your comments and requests that speakers present their remarks in a respectful manner, within established time limits, and focus on issues which directly affect the City or are within the jurisdiction of the City. As the Committee is prohibited by State law from discussing items not listed on the agenda, your item will be taken under consideration and may be referred to staff.)*

---

1. Approval of Minutes of March 23, 2015
   Minutes
2. Streamlined Permitting and Reduced Fees for Small Residential Solar Energy Systems (per AB 2188)
   Staff Report
   Attachment I - Draft Ordinance
   Attachment II - Handout for Solar Panel
3. Update on Community Choice Aggregation ("East Bay Community Energy")
   Staff Report
   Attachment I - Roster
4. Update on Emergency Water Conservation Regulations
   Staff Report
   Attachment I - Contingency Plan
   Attachment II - Executive Order
   Attachment III - State Regulations
5. Water Pollution Control Facility (WPCF) Clean and Renewable Energy
   Staff Report
   Attachment I
6. Property Assessed Clean Energy (PACE) – Consideration of New Programs
   Staff Report
   Attachment I - Comparison Table
   Attachment II - Loss Reserve Program
7. Water Conservation, Efficiency, Outreach, and Rebate Programs
   Staff Report
8. Public Litter Containers – Locations for New Containers throughout City
   Staff Report
   Attachment I - Map

9. Update on Waste Management Franchise Implementation (Oral Report Only)

FUTURE AGENDA ITEMS

10. Suggested Agenda Topics for September 2015
Agenda Topics

COMMITTEE MEMBER ANNOUNCEMENTS AND REFERRALS

ADJOURNMENT

NEXT REGULAR MEETING – 4:30 – 6:30 PM; THURSDAY, SEPTEMBER 10, 2015

****Materials related to an item on the agenda submitted to the Council after distribution of the agenda packet are available for public inspection in the City Clerk's Office, City Hall, 777 B Street, 4th Floor, Hayward, during normal business hours. An online version of this agenda and staff reports are available on the City's website. All Council Meetings are broadcast simultaneously on the website and on Cable Channel 15, KHRT. ****

Assistance will be provided to those requiring accommodations for disabilities in compliance with the Americans Disabilities Act of 1990. Interested persons must request the accommodation at least 48 hours in advance of the meeting by contacting the Assistant City Manager at (510) 583-4300 or TDD (510) 247-3340.

HAYWARD CITY COUNCIL, 777 B STREET, HAYWARD, CA 94541
HTTP://WWW.HAYWARD-CA.GOV

CITY COUNCIL SUSTAINABILITY COMMITTEE MEETING
Hayward City Hall – Conference Room 2A
777 B Street, Hayward, CA 94541-5007

March 23, 2015
4:30 p.m. – 6:30 p.m.

MEETING MINUTES

CALL TO ORDER: Meeting called to order at 4:28 p.m. by Chair Al Mendall, Council Member.

ROLL CALL:

Members:

- Al Mendall, City Council Member /CSC Chair
- Greg Jones, City Council Member
- Francisco Zermeño, City Council Member
- Laura Oliva, Keep Hayward Clean and Green Task Force/CSC Vice Chair

- Dianne McDermott, Planning Commissioner - absent

Staff:

- Kelly McAdoo, Assistant City Manager
- Alex Ameri, Director of Utilities & Environmental Services
- David Rizk, Development Services Director
- Dennis Zafiratos, Senior Building Inspector
- Erik Pearson, Environmental Services Manager
- Elisa Wilfong, WPSC Administrator
- Gary Nordahl, Building Inspector
- Jennifer Yee, Sustainability Technician
- Mary Thomas, Administrative Analyst I
- Michael Christensen, Assistant Planner
- Sean Reinhart, Library & Community Services Director
- Vera Dahle-Lacaze, Solid Waste Manager
- Carol Lee, Administrative Secretary (Recorder)

Others:

- Ernest Pacheco, Communications Workers of America (CWA)
- Liz McElligot, Alameda County
- Caitlin Palmer, Mills College
- Jillian Buckholz, California State University, East Bay
- Rebecca Brown, Bevilacqua-Knight, Inc. (BKi)
- Joe Galiano, CAGCP/BKi
- Juan M. Contreras, CAGCP/BKi
- David Tucker, Waste Management of Alameda County
- Scott Salge, Noll & Tam Architects
- Abraham Jayson, Noll & Tam Architects

PUBLIC COMMENTS:
None

1. **Review of Minutes of January 15, 2014 -** Minutes approved.

2. **Hydrogen Fuel Cell Cars & Fueling Stations**

Erik Pearson, Environmental Services Manager, introduced Joe Gagliano from California Fuel Cell Partnership (CFCP). Mr. Gagliano presented information about CFCP, a variety of fuel cell vehicles, and hydrogen fueling stations, including a proposed station on A Street in Hayward.

Council Member Zermeño inquired about any potential negative aspects of hydrogen use. Mr. Gagliano replied that the hydrogen used as alternative fuel is mostly derived from steam reformation of natural gas. Although this process does have a greenhouse gas footprint associated with it, part of the efforts of CFCP is to find 100% renewable sources, such as onsite use of biogas and electrolysis of water to produce hydrogen or derived from wind or solar. Juan M. Contreras, of CFCP, provided additional information about the use of hydrogen in industrial applications and as fuel.

Council Member Jones asked what the cost per mile would be for hydrogen fuel cell vehicles. Mr. Contreras responded that they did not have that information readily available, but offered to provide a report by the Department of Energy which provides that information.

Laura Oliva, Keep Hayward Clean and Green Task Force, inquired about the expected timeline for the stations that were expected to come online. Mr. Gagliano replied that the twenty-eight fueling stations funded last year were expected to come online by the end of 2015. He further estimated that the Hayward station would be operational by the end of January 2016.

Council Member Mendall noted that the cost per fueling station ranged from $1M to $9M, which seemed to be a wide range. Mr. Gagliano explained that some of the existing fueling stations have been updated over the years, which has increased the total cost associated with that station. He estimated that the cost for any fueling stations to come online at the present time, including Hayward's station, would cost around $2M. Council Member Mendall also inquired about the location of Hayward's fueling station. Mr. Gagliano replied that it would be at 391 West A Street, Hayward, CA, 94541. Mr. Pearson further explained that it will be located at the current 76 gas station on A Street at 880.

3. **Overview of Rainwater Catchment and Graywater Recycling**

Director Ameri introduced David Rizk, Development Services Director, who provided an overview of graywater recycling. Director Rizk introduced additional staff who were available to address technical code questions. Erik Pearson continued by presenting on rainwater catchment, highlighting the use of rain barrels as an effective method to collect rainwater, despite limited rainfall. Abraham Jayson and Scott Salge, Noll & Tam Architects, presented the next portion of the presentation, focusing on the City's plans for the new main library and civic plaza's rainwater catchment and recycling system.

Council Member Zermeño inquired if there would be a backup system which could be utilized during the summer months when the amount of rainfall would be limited. Mr. Salge explained that municipal pressured water is connected to both the library and plaza site and when the catchment cistern is empty, the municipal water source will automatically provide pressure.

Ms. Oliva, referencing a comment Mr. Salge made during his presentation about the potential to utilize the civic plaza lawn for food truck events, expressed concern over potential spills or illegal discharge of oils and chemicals into the ground directly over the catchment system, causing possible contamination. Mr. Salge expressed that all the water from the supply side goes through a filtration and disinfection system.

Council Member Mendall commented that residential graywater is good, but large scale graywater systems are going to make the most significant impact on lowering Hayward's water use. He suggested that private golf courses would be an example of a business that could benefit from rain water catchment or graywater recycling for irrigation. He expressed interest in the potential of using stormwater and treated water from the treatment plant as sources for municipal irrigation and encouraged further discussion of the matter in the future.

Director Ameri commented that there is a plan for larger scale water recycling program at the Waste Water Treatment Plant, and that staff is working to secure sources of funding to implement the project. He further explained that stormwater is difficult to utilize for irrigation because of the influx available during the winter months and increased need during the summer months. He assured that the current practice of discharging stormwater into the Bay is beneficial to the ecosystem of the estuary.

Director Rizk informed the Committee that staff will be providing customers with more information regarding rainwater catchment and graywater recycling, especially as the drought continues. Ms. Oliva added that it would be beneficial to include information regarding acceptable types of laundry detergent when considering installing a graywater recycling system. Staff affirmed her suggestion.

4. Additional State Emergency Water Conservation Regulations

Alex Ameri, Director of Utilities & Environmental Services, presented on behalf of Alicia Sargiotto. He provided the Committee with information pertaining to recent revisions to the existing Emergency Regulations for Statewide Urban Water Conservation in response to the increased severity of current drought conditions and shared additional requirements for urban water suppliers required by the State Water Board.

Council Member Zermeño asked if water waste could be reported through Access Hayward. Director Ameri confirmed that water waste can be reported on Access Hayward and there was a designated drought watch website which also provides means to report water waste activity. Several Committee members were not able to locate water waste as a topic on the mobile application during the meeting. The day following the meeting, staff confirmed that water waste was already a topic on Access Hayward under the utilities category, but that it had not yet been added as a topic on the mobile version. Staff subsequently added water waste as an issue type on the mobile application. Council Member Zermeño also suggested including some regional water conservation graphics in upcoming water bills to encourage and remind customers of the importance to conserve water.

Council Member Jones suggested considering an incentive for industrial users who consume a significant amount of water to implement systems to treat and recycle water, as a method to increase efforts in water use reduction. He added that it may be beneficial to look into the idea of encouraging commercial customers to cut back, as many of Hayward's residential customers have already made significant efforts to reduce water usage at home.

Council Member Mendall responded that it may be difficult for some large manufactures to cut back on their water use, however partnering with them to implement or invest in graywater recycling may be something that is possible without having to limit their water supply. Council Member Zermeño concurred and stressed the importance of the City working with the large local manufacturers to ensure that they don't relocate to another city.

5. Update on Community Choice Aggregation

Ms. Oliva disclosed she had to recuse from participating from discussions of this item as she is a PG&E employee.

Erik Pearson provided a brief update on Community Choice Aggregation (CCA). He stated that the Transportation and Planning Committee of the Board of Supervisors has decided to form one large steering committee consisting of around thirty members appointed by the five supervisors, and one representative from each city in the County. Staff desired to seek the input of the Committee regarding Hayward's representative prior to bringing the item to the City Council.

Council Member Mendall expressed interest in being the City's representative. The Committee took a formal vote to which Council Member Jones and Council Member Zermeño voted aye. Staff will prepare to include the Committee's suggestion in the staff report to City Council on April 7, 2015.

6. USEPA Regional IX (Storm) Water Quality Improvement Grant

Elisa Wilfong, Water Pollution Control Administrator, informed the Committee that the EPA Region 9 has awarded the City $800,000 from the San Francisco Bay Water Quality Improvement Fund for the City's four-year Youth-Based Trash Capture, Reduction and Watershed Education Project.

The Committee commended staff on their efforts resulting in the awarding of funds.

Council Member Zermeño asked if this program would provide the City with additional BigBelly garbage bins. Ms. Wilfong explained that the project was designed to implement additional underground trash capture devises. Director Ameri stated that staff would look into this option. Mr. Zermeño further inquired if the City uses chemical agents to kill weeds, expressing concerns that the chemicals can enter city storm drains. Director Ameri stated that chemical agents are not used at any of the City's water facilities, but at the waste water treatment plant, approved chemical agents are used to kill weeds that grow between large rocks used to stabilize large embankments.

Council Member Mendall suggested cataloging the types of trash that are captured in the devices to identify certain areas that may have concentrated levels trash accumulation and to respond by placing

additional garbage bins in those locations. Ms. Wilfong responded that staff will collect, sort, and direct future control measures based on findings.

7. City Hall Containers for Garbage, Recyclables, and Organics

Erik Pearson provided a presentation on anticipated new containers for garbage, recyclables and organics for City Hall and provided the Committee with additional handouts.

Council Member Zermeño expressed concern about properly educating facilities staff to keep the sorted items separate. Mr. Pearson assured the Committee that the current practice does include appropriately sorting the materials collected and that staff will be working together to ensure that it continues to happen.

Council Member Mendall communicated the importance of keeping the large public bins and the smaller office bins consistent in the color of the bins and the number of bins placed at any given location in order to alleviate confusion and minimize disposing items in the incorrect bins.

8. Earth Day Events

Vera Dahle-Lacaze presented a brief overview of four anticipated Earth Day events.

Council Member Zermeño suggested providing information pertaining to rainwater catchment, including information on rain barrel rebates, and displaying the regional water conservation graphics to further promote water conservation. Council Member Mendall further suggested displaying information about reporting water waste on Access Hayward to encourage people to report water waste activities.

Council Member Jones inquired if a StopWaste representative will be present at the Earth Day activities. Ms. Dahle-Lacaze responded that a variety of informational literature from the Authority would be available. Mr. Jones requested that staff have information emphasizing separating organics available at the events. Several Committee members suggested having a compost bin available on display. Staff responded that they will do so.

9. Update on Waste Management Franchise Implementation

Alex Ameri introduced the item by stating that the new Franchise Agreement with Waste Management went into effect on March 1, 2015. Director Ameri recognized David Tucker, Waste Management of Alameda County's Director of Community and Public Relations, who was present and available to provide additional information. Erik Pearson presented an update on new services and new requirements pertaining to the new Franchise Agreement.

Council Zermeño asked when the City should expect the BigBelly garbage bins, noting that they would be useful on Tennyson Road. Mr. Pearson responded that staff is currently mapping all the City containers in order to be strategic about the placement of future containers and noted that staff would bring that before the Committee in June. Council Member Mendall requested that Ms. Oliva share with staff any information that Keep Hayward Clean and Green Task Force may have regarding prime locations in need of additional containers.

Mr. Mendall expressed his appreciation that the overage charges for multi-family properties in the new Franchise Agreement were addressed in a manner that seemed fair and reasonable. David Tucker stated the Waste Management of Alameda County (WMAC) staff has met with the Rental Housing Owners Association and plans to meet with the Association again in April to discuss and detail their monitoring the overfilled bins. He noted that hopefully by June they will have the program finalized and ready for implementation.

Mr. Mendall also inquired about the reaction of residents to the rate increase. Ms. Dahle-Lacaze characterized the majority of phone calls as ones that do not address the rate increase, but rather inquire about what the specific services entail, primarily multi-family properties requesting information on bulky items pick up service.

10. Suggested Sustainability Committee Quarterly Meeting Topics for 2015

Alex Ameri presented the tentative meeting topics for 2015.

Council Member Zermeño requested an update on bicycle sharing programs. Council Member Mendall suggested having a brief update on the item in the fall, as it was first brought to the Committee in September 2014.

Council Member Mendall requested to see large scale graywater recycling and rainwater catchment addressed sometime in the next year.

Laura Oliva asked staff to provide additional information regarding the advanced metering infrastructure (AMI) pilot program. Director Ameri explained that AMI program will allow the City to read water meters remotely and the usage information to be shared with water customers.

Council Member Jones inquired about the annual update on the City's progress towards the climate action plan goals. Staff stated that the issue was presented in January and acknowledged the Committee's request to provide an update by December.

Director Ameri stated that there have been concerns regarding fast food restaurants and related trash in the public right. He stated that staff will conduct research on the matter in order to bring it before the Committee. Council Member Mendall concurred and suggested to include convenience stores, liquor stores, and the tobacco industry in staff's research. He requested that staff include creative ways to reduce litter reduction in the staff report. Ms. Oliva recommended that staff collaborate with the Keep Hayward Clean and Green Task Force to maximize their efforts.

Council Member Jones raised concern over the composition of the Committee, mentioning the issue of vacancies and frequent absent Committee Members, making having a quorum difficult. Council Member Mendall stated that there was a set of recommendations that will be presented to the City Council in a couple of weeks that will address the composition of the Committee.

Council Member Mendall requested that staff re-address future topics once the Committee is reformed.

COMMITTEE MEMBER/STAFF ANNOUNCEMENTS AND REFERRALS:

11. Update on Green Hayward PAYS Program

Alex Ameri mentioned that, as directed by the Committee, staff is preparing a report on the item for the City Council's consideration. He noted that the item had been tentatively scheduled for a work session on June 23. Kelly McAdoo, Assistant City Manager, added that the scheduled date is subjective to current staff capacity to provide a comprehensive analysis of the implications of changes to the wastewater fund and staff will have a better sense of that once the budget is prepared. She further explained that staff will then be able to better address and recommend funding options, and that the budget timeline will not constrain the Council's ability to take action or appropriate funds. Council Member Mendall mentioned that there seemed to be a time constraint with the program's partners to which Mr. Pearson responded that there was not a definitive deadline, but there were some concerns expressed at the regional level due to funding from the State. It was decided that staff and the Committee would engage in discussions with Rebecca Brown, Bevilacqua-Knight, Inc., after the meeting. Ms. McAdoo expressed her preference to bring the item for a work session in June in order to bring it to the Council for action in July

# # # # # #

Alex Ameri announced that California State University, East Bay (CSUEB) has decided to form a Campus Sustainability Committee, has asked for staff participation, and Erik Pearson will be the City's representative in that committee. Mr. Pearson introduced Jillian Buckholz, CSUEB Director of Sustainability, who mentioned that the committee is anticipated to formalize before the spring quarter.

Erik Pearson mentioned that staff had reported at the January meeting that the City had not been chosen to participate in Rising Sun Energy Center's California Youth Energy Services program in 2015, however due to changes at the regional level, funds have become available and the City has been chosen to participate. The Committee expressed it pleasure related to this.

ADJOURNMENT: 6:21 p.m.

Attendance	Present 3/23/15 Meeting	Present to Date This Fiscal Year	MEETINGS Excused to Date This Fiscal Year	Absent to Date This Fiscal Year
Greg Jones	✓	3	1	0
Dianne McDermott	O	0	0	5
Al Mendall*	✓	4	0	1
Laura Oliva**	✓	5	0	0
Francisco Zermeño	✓	4	1	0

✓ = Present O = absent X = excused
* Chair
** Vice Chair

CITY OF
HAYWARD
HEART OF THE BAY

DATE: June 18, 2015

TO: City Council Sustainability Committee

FROM: Development Services Director

SUBJECT: Streamlined Permitting and Reduced Fees for Small Residential Solar Energy Systems (per AB 2188)

RECOMMENDATION

That the Committee reviews the report and recommends that the City Council adopts the attached ordinance, which would provide an expedited system for the issuance of permits for small residential (single or duplex units) rooftop solar systems, including photovoltaic systems and thermal solar systems for domestic water heaters. Such provisions are mandated by legislation contained in AB2188 (2014) Maratsuchi.

BACKGROUND

Section 65850.5(a) of the California Government Code states that it is the policy of the State to promote and encourage the installation and use of solar energy systems by limiting obstacles to their use and by minimizing the permitting costs of such systems. In furtherance of that objective, Section 65850.5(g)(1) of the California Government Code requires that, on or before September 30, 2015, every city, county, or city and county must adopt an ordinance that creates an expedited, streamlined permitting process for small residential rooftop solar energy systems.

The City currently expedites the review of such applications by reviewing and issuing permits over the counter on "Solar Tuesdays". See details below in the Discussion section.

The City, however, needs to adopt the ordinance mandated by Government Code Section 65850.5(g)(1). The attached ordinance is intended to satisfy that requirement. The ordinance codifies the requirements of Section 65850.5(g)(1), such as accepting and approving applications electronically (fax, email, internet), directing the City's Building Official to develop a checklist of all requirements with which small rooftop solar energy systems shall comply to be eligible for expedited review, and authorizing the Building Official or designee to administratively approve such applications.

DISCUSSION

The ordinance would amend the City's regulations by inserting language providing an expedited plan submittal and review system for residential solar photovoltaic systems of less than 10 kilowatts in size or solar thermal systems for domestic hot water of 30KW or less. The ordinance promotes

the acceptance of electronic submittal and review of plans, use of a standard checklist by applicants and City, and the acceptance of electronic signatures when available. Only one required inspection may be performed by the City's Building Division, with an additional inspection allowed by the Fire Department as appropriate.

Staff does not anticipate any issues with fully implementing the requirements of AB 2188, and is already using a standard plan review and checklist procedure (see handout, Attachment II). In addition, the City currently provides expedited permits through "Solar Tuesdays" with reviews jointly performed by Fire and Building. "Solar Tuesday" was launched in September of 2014 and has been positively received and utilized by all major solar contractors working in Hayward. Through this program we have processed over 200 residential solar permits over the counter. Staff is also in the early development process of implementing complete electronic submittal and review with the goal of eliminating the need to visit City Hall to pull a permit.

ECONOMIC IMPACT

The legislation states that delays in permitting and inspection of solar PV systems create an economic burden on the citizens of California. This ordinance is intended to minimize those delays.

FISCAL IMPACT

The proposed ordinance changes would have a minimal financial impact on the City. The Building Division is already in compliance with the new law. The City'sl current total fee of $300 is less than that allowed in the law ($500) and is in the middle of fees charged by Concord, Berkeley, Alameda and San Leandro. The actual average cost to process these types of applications and conduct inspections is $510 per permit. To continue to promote the installation of such systems, staff proposes no change to the current $300 fee.

PUBLIC CONTACT

Staff will add wording to the City's website emphasizing the use of the checklist and our Solar Tuesday expedited plan check system. The new law affects only solar contractors directly, most if not all of whom in our local area are already using the established system. Staff will continue its outreach efforts to local affected organizations, provide information on the City's website and email local customers/contractors as appropriate.

NEXT STEPS

The City Council is scheduled to consider the attached ordinance on July 7, 2015 and it will be brought back to Council for adoption on July 14, 2015. The ordinance would be effective 30 days after adoption.

Prepared by: Fred Cullum, City Building Official

Recommended by: David Rizk, AICP, Development Services Director

Approved by:

_____

Fran David, City Manager

Attachments:

Attachment I	Draft Ordinance
Attachment II	Handout for Solar Panel Installations for Single-Family Homes

ORDINANCE NO. 15-_____

AN ORDINANCE AMENDING THE RESIDENTIAL CODE FOR THE CITY OF HAYWARD TO ADD SECTION R115, ESTABLISHING EXPEDITED PERMITTING PROCEDURES FOR SMALL RESIDENTIAL ROOFTOP SOLAR SYSTEMS, AS REQUIRED BY AB 2188

Whereas, Subsection (a) of Section 65850.5 of the California Government Code provides that it is the policy of the State to promote and encourage the installation and use of solar energy systems by limiting obstacles to their use and by minimizing the permitting costs of such systems; and

Whereas**,** Subdivision (g)(1) of Section 65850.5 of the California Government Code provides that, on or before September 30, 2015, every city, county, or city and county shall adopt an ordinance, consistent with the goals and intent of subdivision (a) of Section 65850.5, that creates an expedited, streamlined permitting process for small residential rooftop solar energy systems.

NOW, THEREFORE, THE CITY COUNCIL OF THE CITY OF HAYWARD DOES HEREBY ORDAIN AS FOLLOWS:

Section 1. Section R115, titled "Expedited Permitting Procedures for Small Residential Rooftop Solar Systems," is hereby added to the Hayward Residential Code (adopted via Ordinance No. 13-21) to read in full as follows:

Section R115, **California Administrative Code, Chapter 1, Division II**
Small Residential Rooftop Solar Energy System Review Process

A. The following words and phrases as used in this section are defined as follows:

"Electronic submittal" means the utilization of one or more of the following:

1. e-mail,

2. the internet,

3. facsimile.

"Small residential rooftop solar energy system" means all of the following:

1. A solar energy system that is no larger than 10 kilowatts alternating current nameplate rating or 30 kilowatts thermal.

2. A solar energy system that conforms to all applicable state fire, structural, electrical, and other building codes as adopted or amended by the City and paragraph (iii) of subdivision (c) of Section 714 of the Civil Code, as such section or subdivision may be amended, renumbered, or redesignated from time to time.

3. A solar energy system that is installed on a single or duplex family dwelling.

4. A solar panel or module array that does not exceed the maximum legal building height as defined by the authority having jurisdiction.

"Solar energy system" has the same meaning set forth in paragraphs (1) and (2) of subdivision (a) of Section 801.5 of the Civil Code, as such section or subdivision may be amended, renumbered, or redesignated from time to time.

B. Section 65850.5 of the California Government Code provides that, on or before September 30, 2015, every city, county, or city and county shall adopt an ordinance that creates an expedited, streamlined permitting process for small residential rooftop solar energy systems.

C. Section 65850.5 of the California Government Code provides that in developing an expedited permitting process, the city, county, or city and county shall adopt a checklist of all requirements with which small rooftop solar energy systems shall comply to be eligible for expedited review. The City Building Official is hereby authorized and directed to develop and adopt such checklist.

D. The checklist shall be published on the city's internet website. The applicant may submit the permit application and associated documentation to the City's building division by personal, mailed, or electronic submittal, when available, together with any required permit processing and inspection fees. In the case of electronic submittal, the electronic signature of the applicant on all forms, applications and other documentation may be used in lieu of a wet signature.

E. Prior to submitting an application, the applicant shall:

1. Verify to the applicant's reasonable satisfaction through the use of standard engineering evaluation techniques that the support structure for the small residential rooftop solar energy system is stable and adequate to transfer all wind, seismic, and dead and live loads associated with the system to the building foundation; and

2. At the applicant's cost, verify to the applicant's reasonable satisfaction using standard electrical inspection techniques that the existing electrical system including existing line, load, ground and bonding wiring as well as main panel and subpanel sizes are adequately sized, based on the existing electrical system's current use, to carry all new photovoltaic electrical loads.

F. For a small residential rooftop solar energy system eligible for expedited review, only one inspection shall be required, which shall be done in a timely manner and may include an additional

inspection by the fire chief. If a small residential rooftop solar energy system fails inspection, a subsequent inspection is authorized; however the subsequent inspection need not conform to the requirements of this subsection.

G. An application that satisfies the information requirements in the checklist, as determined by the City Building Official, shall be deemed complete. Upon receipt of an incomplete application, the building official shall issue a written correction notice detailing all deficiencies in the application and any additional information required to be eligible for expedited permit issuance.

H. Upon confirmation by the City Building Official of the application and supporting documentation being complete and meeting the requirements of the checklist, the City Building Official shall administratively approve the application and issue all required permits or authorizations. Such approval does not authorize an applicant to connect the small residential rooftop energy system to the local utility provider's electricity grid. The applicant is responsible for obtaining such approval or permission from the local utility provider.

Section 2. Severance. Should any part of this ordinance be declared by a final decision by a court or tribunal of competent jurisdiction to be unconstitutional, invalid, or beyond the authority of the City, such decision shall not affect the validity of the remainder of this ordinance, which shall continue in full force and effect, provided that the remainder of the ordinance, absent the unexcised portion, can be reasonably interpreted to give effect to the intentions of the City Council.

Section 3. In accordance with the provisions of Section 620 of the City Charter, this ordinance shall become effective 30 days after adoption.

INTRODUCED at a regular meeting of the City Council of the City of Hayward, held the _____ day of _____, 2015 by Council Member_____.

ADOPTED at a regular meeting of the City Council of the City of Hayward, held the____ day of _____, 2015, by the following votes of members of said City Council.

AYES: COUNCIL MEMBERS:
MAYOR:

NOES: COUNCIL MEMBERS:

ABSTAIN: COUNCIL MEMBERS:

ABSENT: COUNCIL MEMBERS:

APPROVED: _____

Mayor of the City of Hayward

DATE: _____

ATTEST: _____
City Clerk of the City of Hayward

APPROVED AS TO FORM:

_____
City Attorney of the City of Hayward

Solar Panel Installations SINGLE-FAMILY RESIDENTIAL

City of Hayward Development Services Department

2015 Update

PERMIT REQUIREMENTS

Permits are required for all solar panel installations. This handout covers the basic drawings and some key code items needed for successful submittal. Solar panel installations for single-family homes are approved over the counter when submitted on Tuesdays as part of Hayward's "Solar Tuesdays" program. If not submitted on Tuesday, there is a maximum 10 business day turnaround for review of permit applications for solar panel projects for single-family homes.

FEES

Single-family residential solar panel permit fees are subsidized by the City to encourage their installation. There is a total flat fee of **$300** for flush mounted systems. This includes plan review and inspection. For installations that require structural calculations such as non-flush mounted panels or unconventional mounting, additional structural review fees will apply.

DRAWINGS

Provide the following drawings stapled together in a single set of plans. Also, staple cut sheets for all equipment specified to the back of the set. The submittal will require **4 sets of plans**.

1. **ROOF PLAN: See example drawing below.**

The required clearances must be maintained for Fire Department access as shown on the drawing below. Show the location of all system components on the plan such as: disconnects, service panel and the inverter. See notes for requirements.

The first sheet of the set must include the designer contact information, project address, description of work and applicable codes.

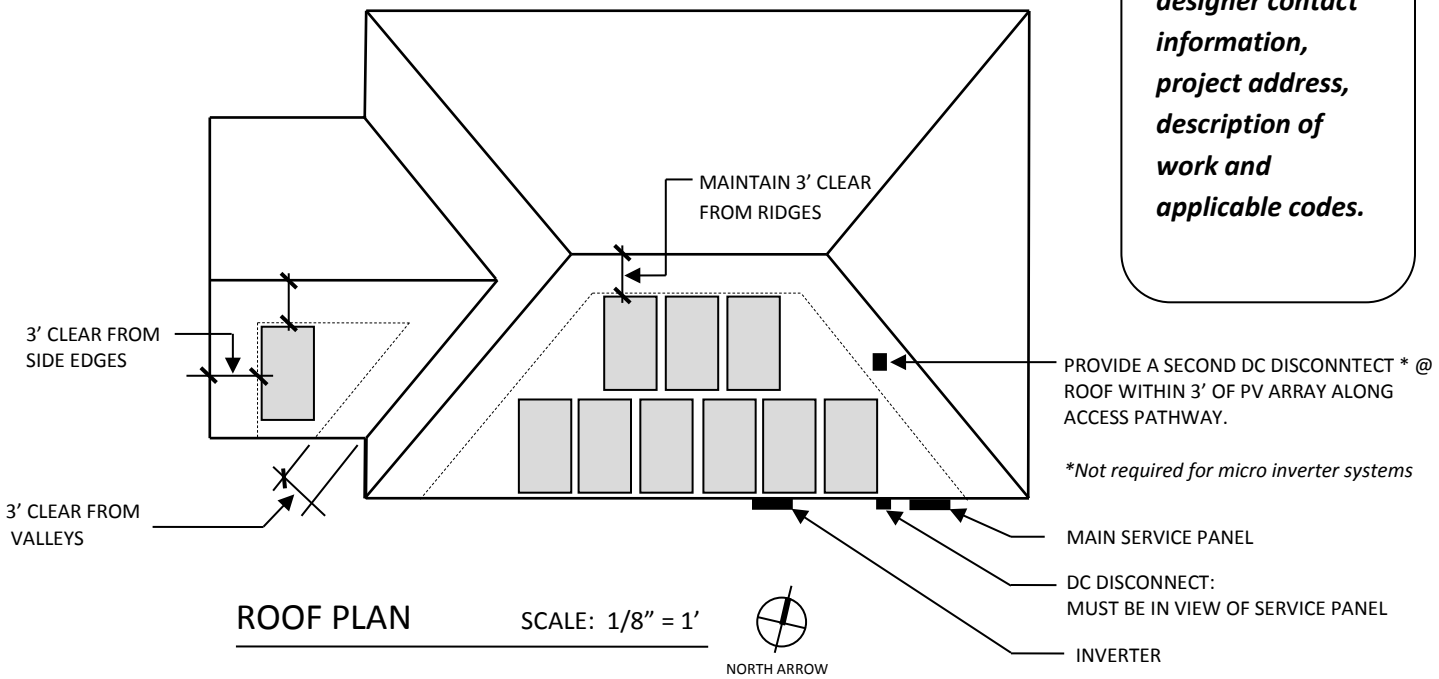

2. ATTACHMENT DETAILS and STRUCTURAL INFORMATION:

- Only use listed mounting hardware
- Verify that each component is compatible with the system
- Provide cut sheets for each product and install according to the manufacture's installation instructions
- Verify flashing, and counter flashing at roof penetrations. Install per manufactures installation instructions.

NOTE: Flush mounted panels as shown in the example drawing below do not require structural calculations. However, **panels that are tilted at a steeper angle than the roof will require structural calculations to verify wind load resistance**. The calculations must be prepared by an engineer and included with the submittal. Calculations must be stamped and signed by the engineer in order to be accepted for review.

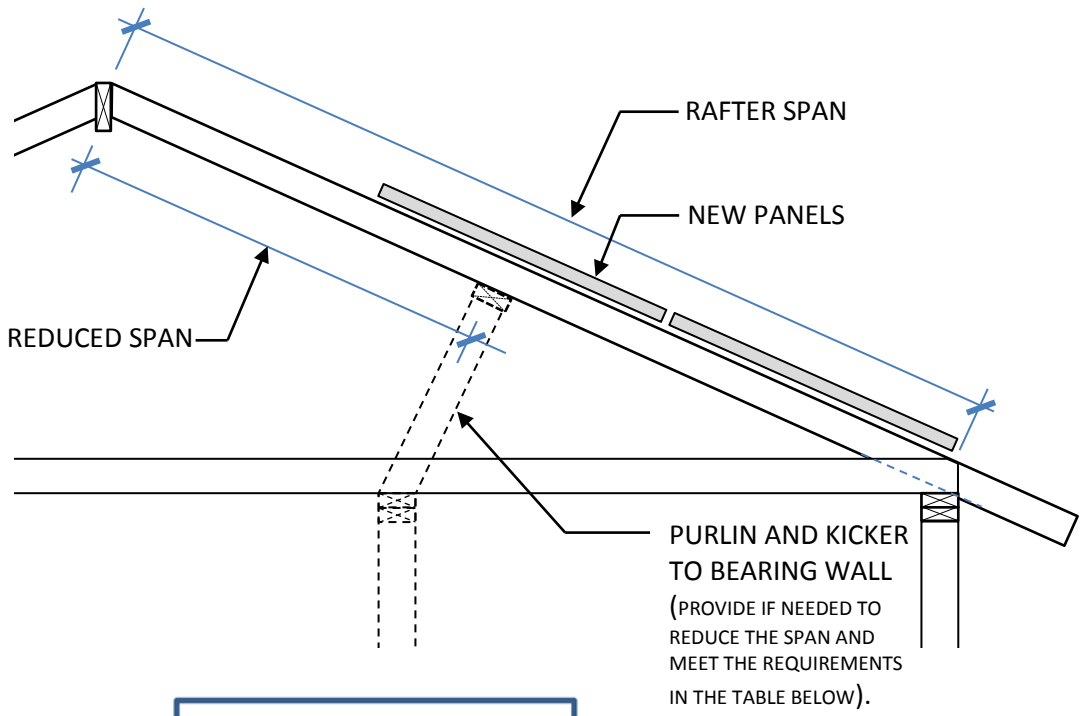

SUMMARY OF 2010 CRC TABLE R802.5.1(1)			
	RAFTER SIZE		
SPACING	2x4	2x6	2x8
16"o.c.	**10'-10"**	**16'-7"**	**21'-0"**
24"o.c.	**8'-0"**	**11'-9"**	**14'-10"**

MAXIMUM SPAN

3. SINGLE LINE DIAGRAM

- **NOTE:** It is the contractor's responsibility to fully comply with the requirements of Article 690 in the California Electrical Code. Confirm that all relevant code items are communicated in the single line drawing.
- Provide cut sheets for each component indicated on the single line diagram. This includes: inverters, disconnects and PV modules.

Commonly Missed Code Items:

1. Photovoltaic disconnecting means shall be installed at a readily accessible location at the exterior of the building. 690.14 (C) (5).
2. PV source conductors that penetrate the building shall be installed in a metallic raceway or enclosure to the first readily accessible disconnecting means located at the exterior of the building.
3. Size and locate load side tie at main service per 2010 CEC Art. 690(B)(1) through (B)(7).

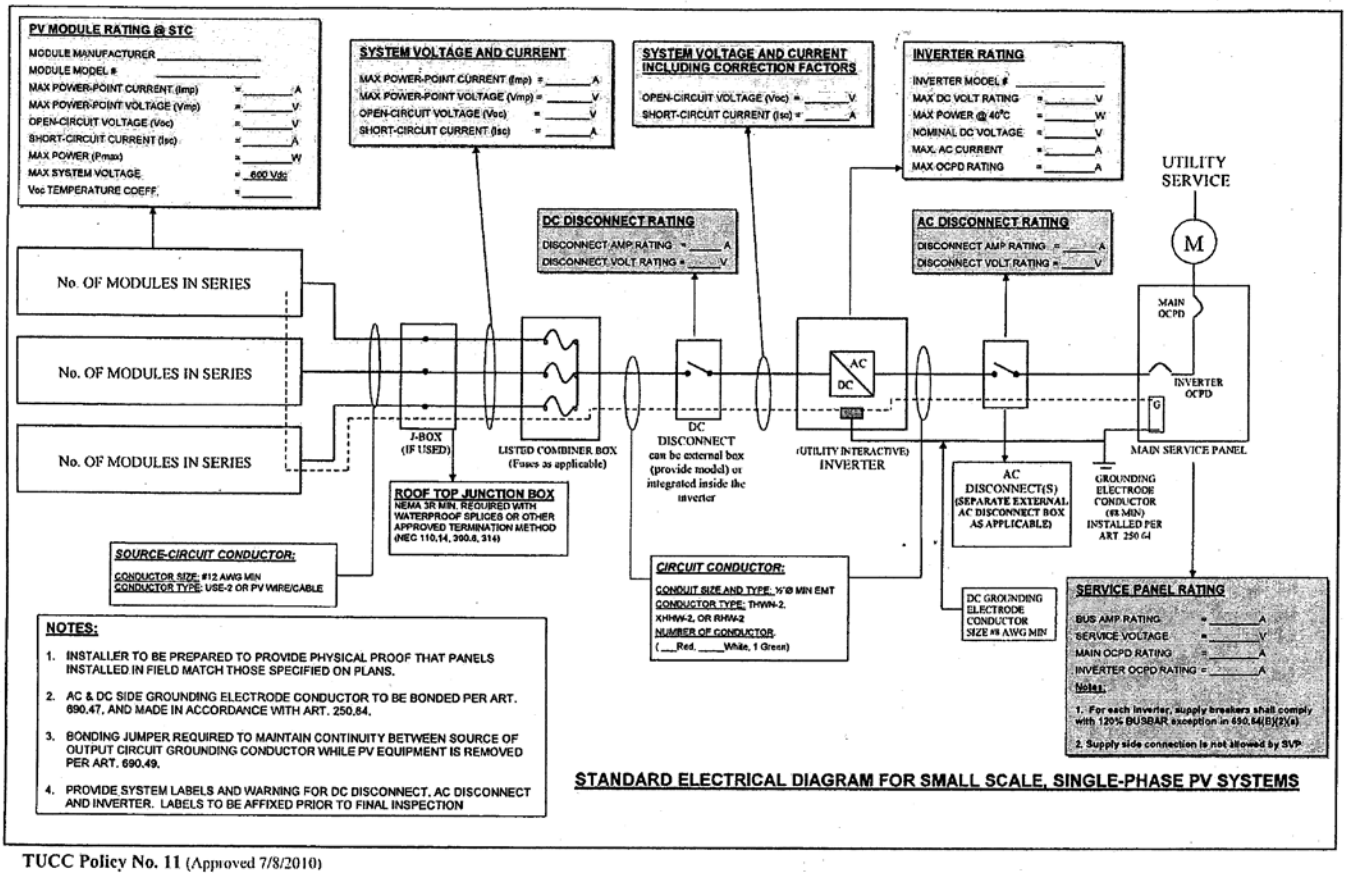

REQUIRED WARNING LABELS

Include diagrams of warning labels on the plans per Article 690 / 2010 CEC. Examples and required locations are shown below.

CAUTION: SOLAR CIRCUIT

Conduit raceways, enclosures, cable assemblies, and junction boxes shall be marked with this label.

SINGLE LINE DIAGRAM

CAUTION: SOLAR ELETRIC SYSTEM

The electrical main service disconnect shall be marked with this label.

WARNING:
ELECTRIC SHOCK HAZARD
DO NOT TOUCH THE TERMINAL

TERMINALS ON BOTH THE LINE AND LOAD SIDES MAY BE ENERGIZED IN THE OPEN POSITION

The inverter shall be marked with this label

CITY OF HAYWARD
HEART OF THE BAY

DATE: June 18, 2015

TO: City Council Sustainability Committee

FROM: Director of Utilities and Environmental Services

SUBJECT: Update on Community Choice Aggregation ("East Bay Community Energy")

RECOMMENDATION

That the Committee reviews and comments on this report.

BACKGROUND

In June 2014, the Alameda County Board of Supervisors voted to study the feasibility of establishing a county-wide community choice aggregation (CCA) program. As noted on the County's website[1], "CCA is a program that enables local governments to aggregate electricity demand within their jurisdictions in order to procure electricity for its customers while maintaining the existing electricity provider, Pacific Gas & Electric Company, for customer billing, transmission, and distribution services." The two main potential benefits of CCA are that electricity can be procured from renewable and green sources and that the rates paid by customers can be competitive with PG&E's. The County intends to hire a consultant to prepare a technical study and will form a steering committee to help guide the preparation of the study and possibly assist with formation of a CCA.

Staff provided general information about CCA to the Committee on January 29, 2014[2] and May 7, 2014[3]. Following the County's decision in June 2014 to study CCA, staff provided updates to the Committee summarizing the County's progress on September 11, 2014[4] and March 23, 2015[5]. The County Board of Supervisors has met several times to discuss goals and objectives for the program as well as the structure of the steering committee that will advise County staff and the County Board of Supervisors. County staff's initial proposal was to establish a technical committee that would include city representatives and a citizens committee that would include community members. After hearing significant concern that the two committees might not have

[1] http://www.acgov.org/cda/planning/cca/index.htm
[2] See Item #5 at: http://www.hayward-ca.gov/CITY-GOVERNMENT/COUNCIL-STANDING-COMMITTEES/COUNCIL-SUSTAINABILITY-COMMITTEE/2014/CSC-CCSC012914full.pdf
[3] See Item #2 at: http://www.hayward-ca.gov/CITY-GOVERNMENT/COUNCIL-STANDING-COMMITTEES/COUNCIL-SUSTAINABILITY-COMMITTEE/2014/CSC-CCSC050714full.pdf
[4] See Item # 6 at http://www.ci.hayward.ca.us/CITY-GOVERNMENT/COUNCIL-STANDING-COMMITTEES/COUNCIL-SUSTAINABILITY-COMMITTEE/2014/CSC-CCSC091114full.pdf
[5] See Item # 5 at http://www.ci.hayward.ca.us/CITY-GOVERNMENT/COUNCIL-STANDING-COMMITTEES/COUNCIL-SUSTAINABILITY-COMMITTEE/2015/CSC-CCSC032315full.pdf

equal influence, the Board of Supervisors decided to establish one large committee to include three appointments from each Supervisorial District, five at-large appointments, and one from each city in the County.

On March 12, 2015, each city in Alameda County received a letter from the County requesting designation of a representative to serve on the steering committee and on March 13, 2015, the County opened the application period for community members. On April 7, 2015[6], Council adopted a resolution designating Council Member Mendall as the City's representative and Council Member Jones as the City's alternate representative on the County's steering committee. All cities in Alameda County (except for Alameda, which has its own power authority) have agreed to participate on the steering committee.

On May 1, 2015, County staff released a list of nominees and on May 5, 2015, the Alameda County Board of Supervisors received many public comments asking for more diversity on the steering committee. The Board approved the list of 21 nominations for the committee and also directed staff to re-open the application period for two weeks to allow time for more candidates to apply. On June 2, the Board approved five more nominations (one from each District) for a total of 26 members. In addition, each of the 13 cities will have a representative so that there will be a total of 39 steering committee members (see Attachment I for the committee roster).

One of the key roles for the steering committee will be to provide input on the scope of work for the feasibility study. The County released a draft request for proposals (RFP) for the study with a preliminary scope of work on April 1 so that potential consultants can begin preparing responses. The scope of work will be finalized after the steering committee has a chance to provide input. The first meeting of the committee will be June 18 at 7 p.m. at the Castro Valley library.

Also on May 5, the Board of Supervisors approved the following name and logo for the CCA effort.

EAST BAY community energy
The Power to Choose

DISCUSSION

Supervisor Haggerty hosted an informational breakfast on May 2 in Hayward. Mayors and Council members from all 14 cities were invited and about half of the cities were represented. Topics covered during the meeting included an introduction to CCA and its function, and Plan Bay Area.

[6] See Item # 4 at http://www.hayward-ca.gov/CITY-GOVERNMENT/CITY-COUNCIL-MEETINGS/2015/CCA15PDF/cca040715full.pdf

County staff explained that the process of studying and possibly forming a CCA will occur in three Phases. The technical study will be completed during Phase 1, at the end of which, the Board will decide whether or not to proceed with Phase 2. Phase 2 would be for program development, including formation of a Joint Powers Authority (JPA). Phase 3 would include customer notifications and commencement of service. Following is a more detailed timeline for the three phases.

Phase 1

June 2015	Issue RFP for technical study
November 2015	Steering Committee reviews technical study
December 2015	Present technical study to Board of Supervisors
December 2015	Decide whether or not to proceed with Phase 2

Phase 2

Spring 2016	Form Joint Powers Authority
Summer/Fall 2016	Submit Implementation Plan to California Public Utilities Commission

Phase 3

First Half of 2017	Secure Energy Contracts
First Half of 2017	Customer Notifications
First Half of 2017	Commence Service

On May 18, 2015, staff attended a CCA Forum in Los Angeles. Most of the presentations were given by existing CCAs and CCA advocates. Following are some key take-aways organized by presenter:

<u>Marin Clean Energy</u>

- Began serving customers in 2010
- Average residential customer is saving $17 per year
- Average commercial customer is saving $130 per year
- School District is saving $64,000 per year
- MCE has generous net metering program – they give cash to customers at end of calendar year
- MCE's opt out rate was approximately 20% in 2010 (PG&E did significant marketing campaign against MCE during start-up)
- When MCE adds new cities, opt out rate is now 10 to 15%
- In January through March this year, MCE did more than 100 community meetings in new communities
- MCE offers Light Green (minimum 50% renewable), Deep Green (100% renewable), and Local Solar (100% local solar)
- This year's light green option is likely to be 56% renewable
- MCE considers local power sources to be those that are within 100 miles of Marin County
- MCE prepares an annual Integrated Resource Plan, which has a ten-year outlook
- Total energy offered by potential providers has exceeded the need by 50 times (there's plenty of renewable energy potential out there)
- New CCAs need to decide priority: do you want RPS-qualified sources or do you want low carbon? (for example, hydro-power is not RPS-qualified, but it is low carbon)
- MCE's Director of Power Resources noted that MCE's priority was RPS-qualified. If he could do it over again, he would prefer that priority be low carbon.

Lancaster Choice Energy

- Needed CCA to meet their Net Zero Community goal
- First stand-alone CCA city (not a JPA and not going to grow into one)
- Rates are lower than So Cal Edison
- From feasibility study to launch took 2.5 years
- Started serving customers on May 1, 2015
- Full launch in October 2015 (will start serving all customers)
- Energy efficiency programs will start in 2016

Sonoma Clean Power

- May is a good month to launch a CCA (that's when PG&E implements their summer rate increase)
- SCP default service is 33% renewable energy, which has 34% fewer GHG emissions than PG&E
- The 100% renewable energy option is from energy that is entirely produced in Sonoma County
- Other regions have indicated a desire to join SCP. Board has yet to decide. (They want to be sure to retain local control.)
- SCP is experiencing a 10 – 15% opt out rate (need to do lots of marketing to compete for customers)

San Mateo County

- Expect to have technical study by August 2015
- Outreach and program design will run until April 2016
- Hope to launch by September 2016
- First steering committee meeting will be May 28, 2015

Others Jurisdictions

- South Bay of Los Angeles area: Eight cities are on-board. They hope to launch within two years.
- San Diego has a couple of studies underway now.

While the exploratory and initial formation costs are significant, the Board of Supervisors has authorized expenditure of County funds to cover Phases 1 and 2. Phase 3 costs could be covered by the County or the County could ask participating cities to contribute. If a CCA is formed, initial costs will be recovered from ratepayers. As mentioned in previous reports, there are potential drawbacks associated with formation of a CCA. For example, it is possible that a CCA could be locked in power contracts that at some point in the future will not be competitive with PG&E. Also, while PG&E's renewable energy portfolio is currently below most CCAs, this could change in the future. Finally, if a primary goal of the CCA is to obtain electricity with a smaller greenhouse gas footprint than that available from PG&E, it will be very difficult to do given that PG&E current currently obtains approximately 30 percent of its electricity from nuclear and large hydroelectric facilities. Staff will work with Council members Mendall and Jones to ensure that these issues are considered by the committee during preparation and review of the technical study.

NEXT STEPS

Staff will continue to follow the County's exploratory phases of CCA, participate in steering committee meetings, and provide regular updates to the Sustainability Committee.

Prepared by: Erik Pearson, Environmental Services Manager

Recommended by: Alex Ameri, Director of Utilities and Environmental Services

Approved by:

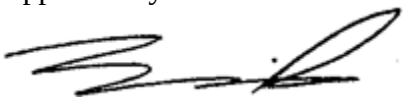

Fran David, City Manager

Attachments:

Attachment I Steering Committee Roster

Alameda County Community Choice Aggregation (CCA)

Steering Committee Membership - CCA, East Bay Community Energy

June 2, 2015

No.	Name	Organization (if applicable)	City	Supervisorial District or City
1	Eloise Hamann	Tri Valley Progressives	Dublin, CA 94568	D1
2	Alex DiGiorgio	Farm League Design & Management	Oakland, CA 94610	D1
3	Subash Sundaresan	Organizing for America	Fremont, CA 94539	D1
4	Monica V. Padilla	Resident	Fremont, CA 94539	D1
5	Fernando Campos	Laborers Union	Oakland, CA 94621	D1
6	Jing Jing He	Asian Pacific Enviromental Network	Hayward, CA 94541	D2
7	Obray Van Buren	Plumbers & Steamfitters Local 342	Hayward, CA 94541	D2
8	Frank Burton	Hayward Demos Democratic Club	Hayward, CA 94541	D2
9	Vic Rolita	IBEW	Hayward, CA 94541	D2
10	Ernest Pacheco	Communications Workers of America	Hayward, CA 94541	D2
11	Tara Marchant	Emerald Cities Collaborative	Oakland, CA 94612	D3
12	Cynthia Landry	SEIU Local 1021	Alameda, CA 94501	D3
14	Mike Croll	Operating Engineers Local 3	Alameda, CA 94501	D3
15	Byron L. Benton	IBEW/NECA	San Leandro, CA 94577	D3
16	Kurt Brinkman	Intrepid Electronic Systems, Inc.	Oakland, CA 94607	D3
13	Gerald (Jerry) Lahr	Assoc. of Bay Area Governments	Oakland, CA	D4
17	Roger Harris	City of Pleasanton Energy Committee	Pleasanton, CA 94566	D4
18	Pamela Evans	AC Green business coordinator	Castro Valley, CA 94552	D4
19	Victor K. Uno	IBEW	Oakland, CA 94619	D4
20	Catherine Brown	Trivalley Progressives	Pleasanton, CA 94566	D4
21	Joan Diamond	Resident, emp. Nautilus Inst Berkeley	Berkeley, CA 94704	D5
22	Andy Katz	EBMUD Ward 4	Berkeley, CA 94704	D5
23	Tom Dalzell	IBEW Local Union 1245	Berkeley, CA 94707	D5
24	Ashoka Finley	Energy Solidarity Cooperative	Oakland, CA 94612	D5
25	Barbara Stebbins	Clean Energy & Jobs Oakland	Berkeley, CA 94702	D5
26	Scott Haggerty	AC Board of Supervisors	Oakland, CA	Uninc Area
27	Dan Shoenholz	Dep. Dir CD - Fremont	Fremont, CA	Fremont
28	Claire Griffing	Sust. Dir. - Albany	Albany, CA 94706	Albany
29	Michael Hannon	City Council - Newark	Newark, CA 94560-3796	Newark
30	Al Mendall	City Council - Hayward	Hayward, CA 94544	Hayward
31	Dianne Martinez	City Council - Emeryville	Emeryville. CA 94608	Emeryville
32	Deborah Cox	City Council - San Leandro	San Leandro, CA 94577	San Leandro
33	Dan Kalb	City Council - Oakland	Oakland, CA	Oakland
34	Tom Bates	Mayor - Berkeley	Berkeley, CA	Berkeley
35	Avalon Schultz	Senior Planner - Union City	Union City, CA 94587	Union City
36	Tim Rood	City Council - Piedmont	Oakland, CA 94612	Piedmont
37	Steven Spedowfski	City Council - Livermore	Livermore, CA 94551	Livermore
38	Roger Bradley	Asst. to City Manager, Dublin	Dublin, CA 94568	Dublin
39	Jerry Pentin	City Council - Pleasanton	Pleasanton, CA 94566	Pleasanton

Known Alternates for Committee

Rachel DiFranco	Sust. Coord - Fremont	Fremont, CA	Fremont
Peter Maass	Mayor - Albany	Albany, CA	Albany
Alan Nagy	Mayor - Newark	Newark, CA 94560-3796	Newark
Greg Jones	City Council - Hayward	Hayward, CA 94541	Hayward
Karen Hemphill	Asst. To City Manager, Emeryville	Emeryville. CA 94608	Emeryville
Corina Lopez	City Council - San Leandro	San Leandro, CA 94577	San Leandro
Daniel Hamilton	Sust. Prog. Mgr - Oakland	Oakland, CA 94612	Oakland
Richard Sealana	Public Works Super. - Union City	Union City, CA 94587	Union City
Martha Aja	Env. Coord., - Dublin	Dublin, CA 94568	Dublin
Junius Williams			D3

CITY OF
HAYWARD
HEART OF THE BAY

4

DATE: June 18, 2015

TO: City Council Sustainability Committee

FROM: Director of Utilities & Environmental Services

SUBJECT: Update on Emergency Water Conservation Regulations

RECOMMENDATION

That the Committee reviews and comments on this report.

SUMMARY

This report provides information about the implications of the Governor's April 1, 2015 Executive Order, which directed the State Water Board to implement mandatory water reductions to reduce statewide potable urban water usage by 25 percent compared with water consumption in 2013. The State Water Board adopted revised Emergency Regulations for Statewide Urban Water Conservation on May 15, 2015, which expand agency reporting requirements, set forth additional water activity prohibitions, and establish conservation tiers for urban water suppliers. The specific conservation standard for Hayward has been set at eight percent.

BACKGROUND

The past four years have seen exceptionally dry conditions throughout the State, prompting Governor Brown to call for a twenty percent reduction in state-wide water use in January 2014. At that time, the City's wholesale water supplier, the San Francisco Public Utilities Commission (SFPUC), asked its customers to reduce consumption by ten percent. The State Water Resources Control Board (also known as the State Water Board) determined that insufficient progress had been achieved throughout the State towards the twenty percent reduction goals, and in response, adopted Emergency Regulations for Statewide Urban Water Conservation on July 15, 2014, prohibiting wasteful outdoor water use, and requiring all urban water suppliers, including Hayward, to implement their Water Shortage Contingency Plan (WSCP). On September 23, 2014, the Council approved an amendment to the City's WSCP, which incorporated the State's mandatory prohibitions into the Stage I actions, and declared a Stage I water shortage.

On March 17, 2015, the State Water Board approved an extension of the Emergency Regulations for Statewide Urban Water Conservation and also included additional requirements for urban water suppliers, including more specific irrigation, food service, and hospitality restrictions, as well as increased reporting requirements. Shortly thereafter, on April 1, 2015, Governor Brown issued an Executive Order that required, for the first time in the State's history, mandatory

conservation of potable urban water use. The State Water Board's actions prompted the City to further amend the WSCP on April 7, 2015 to include new prohibitions to ensure compliance with the regulations (Attachment I). At that time, the implications of the Governor's Executive Order were yet to be defined. On May 5, 2015, the State Water Board again revised the Emergency Regulations in accordance with the Governor's directive, the provisions of which went into effect on May 15, 2015.

DISCUSSION

The State Water Board's Emergency Regulations consist of four main types of requirements: a prohibition on certain irrigation practices; an order that all urban water suppliers reduce their total potable water production by a defined percentage; an order that other distributors of public water supply ("small water suppliers" defined as those with less than 3,000 connections) reduce potable water consumption; and an order for all self-supplied commercial, industrial, and institutional water users to reduce potable water usage. The regulation also includes reporting requirements and new tools to ensure compliance.

<u>End User Requirements</u>

The Emergency Regulations list existing water use restrictions that prohibit:

- Using potable water to wash sidewalks and driveways (and other hardscapes)
- Allowing runoff when irrigating with potable water
- Using hoses with no shutoff nozzles
- Using potable water in decorative water features that do not recirculate the water
- Irrigating during and 48 hours following measurable rainfall (all of which are restrictions included in the City's WSCP).

The Emergency Regulations also include the following new prohibitions applicable to all Californians:

- Irrigation with potable water of ornamental turf on public street medians.
- Irrigation with potable water outside of newly constructed homes and buildings in a manner inconsistent with regulations or other requirements established by the California Building Standards Commission and the Department of Housing and Community Development.

The City has very few medians that consist of exclusively ornamental turf. Those that are landscaped in such a manner have had irrigation turned off in order to be in compliance with the regulations. Many medians contain a mix of shrubs, non-turf groundcover, and trees and the City's Landscape Maintenance Division maintain these areas in compliance with the regulations, which allow irrigation a maximum of two days per week as well as the requirement to not allow runoff when irrigating.

The following graphic, provided by the Water Board, is helpful is illustrating the defined prohibitions.

In California, as a whole, about half of urban water is used for landscape irrigation. The Department of Water Resources (DWR) is updating the Model Water Efficient Landscape Ordinance (MWELO), which promotes efficient landscapes in new developments and retrofitted landscapes. The Executive Order calls for revising the MWELO to increase water efficiency standards through more efficient irrigation systems, greywater usage, onsite storm water capture, and by limiting the portion of landscapes that can be covered by turf. The current schedule for adoption of the revised MWELO is July 15, 2015, with implementation by the end of 2015. Simultaneously, the California Building Standards Commission will update the CalGreen Code to reflect the changes in the MWELO. In the interim, staff is working to establish conditions of approval for new development which will also aid in reducing water consumption. Currently proposed conditions of approval would require developers to:

- Install all plumbing necessary to allow for the use of greywater for irrigation purposes
- Install hot water recirculation pumps, and, if possible, locate hot water heaters to optimize the distance between the hot water source and the bathrooms.
- Install rain water catchment (minimum of 300 gallons of storage).

Staff still needs to determine the details of when and how these conditions will be imposed, but will continue to provide updates to the Committee as the process progresses.

<u>Commercial, Industrial, and Institutional Users (CII)</u>

The Executive Order also directs the State Water Board to require that commercial, industrial, and institutional (CII) properties implement water efficiency measures consistent with the reduction targets. However, there are no specific use reduction targets for these types of users. The State Water Board has recommended that water suppliers should decide how to meet their conservation standard through reductions from both residential and non-residential users, and are encouraged to look at their CII properties that irrigate outdoor ornamental landscapes with potable water for potential conservation opportunities.

The existing requirements related to the serving of drinking water other than upon request in eating or drinking establishments, as well as the requirement that hotels and motels provide guests with the option of choosing not to have towels and linens laundered daily remain in effect and are incorporated into the City's WSCP (Attachment I).

CII users with an independent source of water supply (i.e. not served by the water supplier), are required to either limit outdoor irrigation to two days per week or achieve a 25 percent reduction in water use.

Establishment of Conservation Tiers

The Governor's April 1 Executive Order (B-29-15) directed the State Water Board to impose restrictions to achieve a statewide 25 percent reduction in potable urban water usage through February 2016, as compared to the amount used in 2013. The Governor instructed the State Water Board to consider the relative per capita water usage of each supplier's service area and to require those areas with high per capita use to achieve proportionally greater reductions than those with low use. The conservation savings for all urban water suppliers are allocated across nine tiers of increasing levels of residential gallons per capita per day (R-GPCD) water use, also shown in the table below. Suppliers have been assigned a conservation standard between 8 and 36 percent, based on their R-GPCD for the months of July through September 2014. These months reflect the amount of water used for summer outdoor irrigation, which provides the greatest opportunity for conservation savings. Water suppliers that reduced their water use prior to the drought have a lower R-GPCD and thus a lower conservation standard. The July through September 2014 R-GPCD for the City was 62.1, thus placing Hayward among the twenty-three agencies in the state in the lowest assigned tier and requiring an eight percent conservation standard.

Tier	R-GPCD	# of Suppliers in Range	Conservation Standard
1	Reserved	0	4%
2	0-64.9	23	8%
3	65-79.9	24	12%
4	80-94.9	44	16%
5	95-109.9	51	20%
6	110-129.9	48	24%
7	130-169.9	82	28%
8	170-214.9	54	32%
9	215-612	85	36%

Some suppliers may be eligible for placement into an even lower four percent conservation tier under two situations where the urban water supplier either delivers more than twenty percent of their total water production to commercial agriculture, or has a reserve supply of surface water that could last at least four years, neither of which is applicable to the City.

Compliance Assessment and Reporting

There are existing reporting requirements related to total monthly water production (for Hayward, total water purchased from SFPUC) and specific reporting on residential water use and enforcement. These requirements, put in place in July 2014, remain in effect. Because the conservation standard applies to total water production, the revised emergency regulation expands the reporting to include information on water use in the commercial, industrial, and institutional sectors. The State Water Board will begin assessing compliance with the submittal of the June monthly report, due July 15, 2015. Beyond June, the Water Board will track compliance on a cumulative basis (i.e. conservation savings will be added together from one month to the next and compared to the amount of water used during the same months in 2013). The table below illustrates an example calculation of monthly and cumulative savings. The Water Board has committed to work with water suppliers that are not meeting their targets, which could include changes to rates and pricing, restrictions on outdoor irrigation, public outreach, rebates and audit programs, leak detection, and other measures. The Water Board's expressed commitment notwithstanding, the Governor has stated that he feels strongly about enforcement actions and that approved fines will be levied where noncompliance is reported.

Example Comparison of Monthly and Cumulative Savings

Month	2013 Water Use	2015 Water Use	Monthly Savings	Cumulative Savings
June	1,000	900	10.0%	10.0%
July	1,500	1,400	6.7%	8.0%
August	1,200	1,100	8.3%	8.1%

As illustrated in the graph below, the City's water use in 2014 was lower than what it needs to be in 2015 in order to be considered in compliance with the Emergency regulations. This is indicative of the fact that Hayward's customers heard the call for conservation early on and began cutting back prior to the Emergency Regulations. However, it is also noteworthy that current water use is trending more similarly to 2013 (i.e. higher than 2014) with the exception of the month of May. The implication of this trend, coupled with the State's method for evaluation of compliance with the conservation standard, is that if June 2015 production is less than eight percent below June 2013 production, the City will be deemed out of compliance with the regulations.

Another way of looking at what an eight percent conservation standard means for the City is to quantify that the cumulative estimated savings target for June 2015 through February 2016 is approximately 358 million gallons. For context, the water savings during that same time frame in 2014, as compared to 2013, was approximately 518 million gallons (a twelve percent reduction). While this bodes well for the City's ability to reach the reduction requirement, staff is committed to continuing conservation programs, outreach, and education to ensure compliance with the State's regulations.

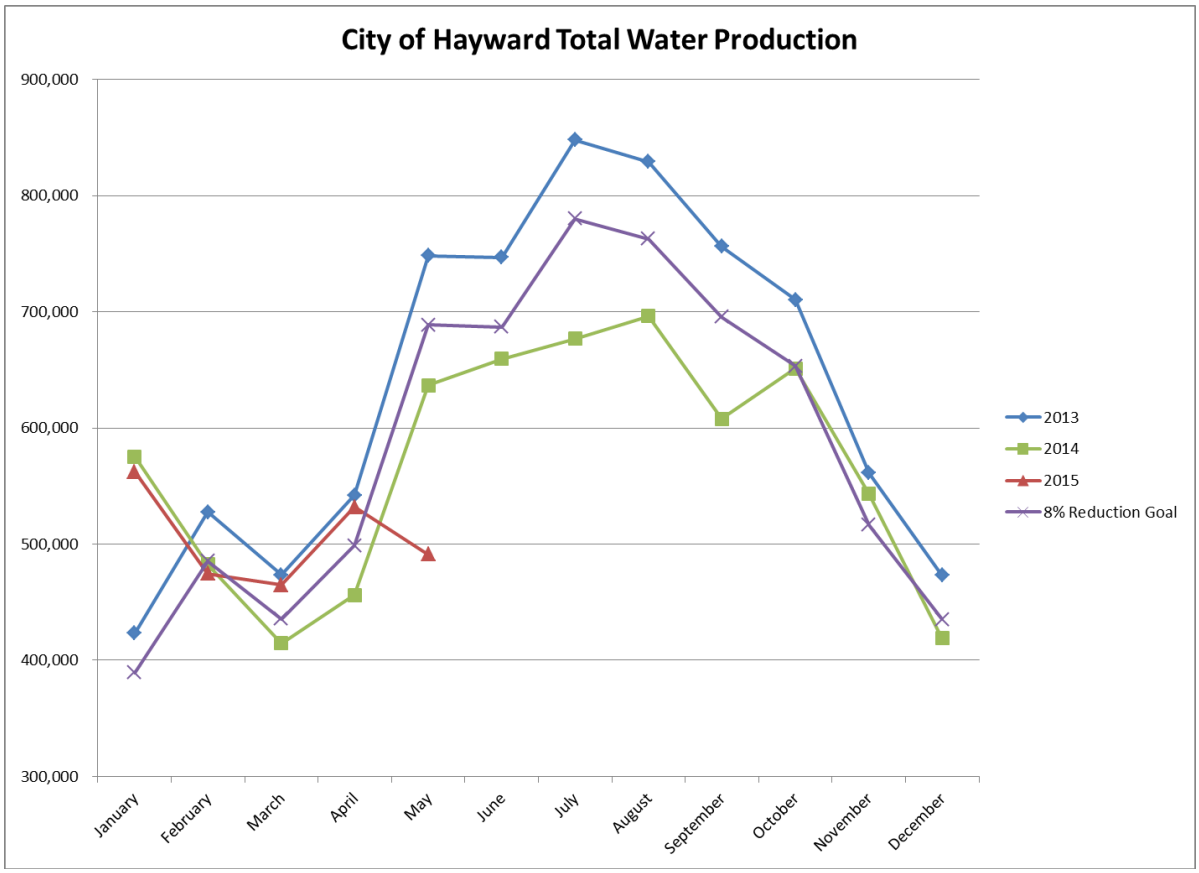

Statewide Lawn Replacement Partnership and Other Rebate Programs

The Governor's Executive Order also states that the Department of Water Resources (DWR) shall lead a statewide initiative, in partnership with local agencies, to collectively replace 50 million square feet of lawns and ornamental turf with drought tolerant landscapes. DWR is still working out their approach but have initially provided that they will be using $25 million in Proposition 1 funding to provide both rebates and direct installation services for a statewide turf replacement program.

DWR is also exploring a statewide high efficiency toilet and urinal replacement rebate program, which would be implemented similarly to the lawn replacement program. The schedules for both programs are unknown at this time. Staff will closely follow the development of both programs and advise customers, where applicable, of the ability to "layer" the rebate the City provides with the State's.

California Energy Commission and Department of Water Resources Partnership

The Executive Order further requires the California Energy Commission to work jointly with DWR to implement a statewide appliance rebate program to provide incentives for the replacement of inefficient household devices that would result in both water and energy savings (e.g. hot water heaters, dishwashers, clothes washers, showerheads, etc.). These efforts would be funded using the

State's Greenhouse Gas Reduction Fund (also known as "cap and trade" funding) and are scheduled to launch in late July or early August.

Enhanced Conservation Efforts

The City has a long standing commitment to water conservation and has had an active conservation program for many years. In addition to existing programs and activities, the Emergency Regulations have also resulted in the need for enhanced conservation efforts to ensure compliance with the eight percent reduction requirement. These efforts include communicating the current drought restrictions using a variety of communication tools such billboard messages, social media, direct mail, email newsletters, and updated website information to inform and encourage customers to take the drought seriously and cut back where possible in order to delay more draconian mandatory reductions if the drought continues.

A strategic communications plan was developed in cooperation with the City's Communications & Media Relations Officer to raise awareness of the drought conditions, acknowledge the water savings that Hayward customers have achieved so far, and promote water conservation and best practices. A "Drought Watch" website has been developed to provide updated and relevant information about drought conditions locally and throughout the State and can be accessed at http://www.hayward-ca.gov/droughtwatch/. Additional communication will be delivered as necessary through the summer to maintain awareness of the drought and achieve water use reduction targets.

Enforcement Activities

Staff has developed an enforcement program to ensure compliance with the Emergency Regulations. A dedicated telephone line and email address has been established and publicized to receive reports of water waste. Reports of water waste are also being listed as an option in the Access Hayward system. Furthermore, all City staff, particularly those out in the field, have been instructed to report instances of wasteful water use that they may observe.

Staff relies initially on written communications to address reported violations by issuing letters to responsible property owners. In many cases, formal notification from the City is sufficient to achieve compliance. If violations continue and no contact has been made with the customer, staff follows up on the report by placing a door hanger on the property, advising the customer of the violation and the potential for further enforcement. For particularly egregious and ongoing violations, staff is prepared to accelerate enforcement action up to and including administrative citations. Authority for issuing citations in contained in the Nonessential Water Use Prohibition Ordinance. The Ordinance also enables staff to terminate or restrict water service if necessary to bring the customer into compliance. To date, staff has not yet had the need to issue administrative citations.

ECONOMIC IMPACT

Although not yet significant, the costs of implementing actions to meet the State Water Board's directive and achieve water use reductions will be included as future water rates are set.

FISCAL IMPACT

Water conservation program management staffing is provided by the Utilities & Environmental Services Department and is funded entirely in the Water Operating Fund. There are no General Fund impacts. Staff is generally using readily available and low cost methods for outreach. Some staff time is needed to develop the strategic communications plan and to follow up on reports of excessive use.

PUBLIC CONTACT

Public outreach will be conducted throughout the year as needed and in accordance with the communications plan discussed earlier in this report.

NEXT STEPS

Staff will continue to monitor the water supply situation and conservation data and provide periodic updates. Additional outreach and enforcement will also be implemented as needed. Staff will also continue to develop and implement conditions of approval for new development to achieve water conservation on a long term basis, and will closely follow the State's direction with the MWELO revisions, which may require modification to the City's water conservation ordinances.

Prepared by: Corinne Ferreyra, Administrative Analyst II

Recommended by: Alex Ameri, Director of Utilities & Environmental Services

Approved by:

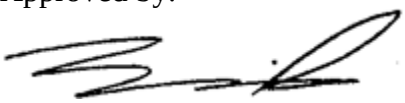

_____

Fran David, City Manager

Attachments:

Attachment I	Water Shortage Contingency Plan (WSCP)
Attachment II	Executive Order B-29-15
Attachment III	State Emergency Water Conservation Regulations (5/15/15)

CITY OF HAYWARD
WATER SHORTAGE CONTINGENCY PLAN
(Excerpted from 2010 Urban Water Management Plan and Revised)

In response to a water shortage due to climate conditions, emergency event or other causes, the City would implement a Water Shortage Contingency Plan.

Stages of Action

Hayward's past experience with water shortages, most notably in 1977 and from 1987-1992, has shaped its current plans for managing such an event in the future. The following stages have been developed to respond to increasingly severe drought conditions and are triggered by water supplies.

Table 5-12
Water Shortage Stages of Action

Stage	Water Supply Conditions	% Shortage
I	• Single or multiple dry year(s) • Supply is 90 to 99% of normal	Up to 10%
II	• Critically dry year • Supply is 80 to 90% of normal	10 – 20%
III	• Second dry year or critically dry year • Supply is 50 to 80% of normal • Loss of 20 to 50% of supply due to emergency	20 – 50%
IV	• Supply is less than 50% of normal • Loss of 50% or more of supply due to emergency	Over 50%

Source: City of Hayward

Hayward's most recent experience with severe water supply shortages was during the state-wide drought of the early 1990s, in which Hayward customers reduced water use by 27%. The rationing program implemented was modeled on the very successful effort launched in 1977, in which Hayward customers reduced water usage by about 32%. More recently, a Stage I rationing effort was implemented following SFPUC's requested voluntary reduction of 10% in 2007. Although no mandatory prohibitions were implemented, the voluntary actions taken by Hayward customers resulted in Hayward exceeding the reduction target.

However, given the programmatic water conservation measures which have been implemented in recent years and resulting decreases in water usage, it will be more difficult to achieve further savings during a drought through voluntary measures alone. The actions associated with a Stage I water supply condition contain a mix of mandatory prohibitions and voluntary actions.

Succeeding stages of action mandate additional restrictions. Because water supply conditions vary, even during periods of dry conditions, the Water Shortage Contingency Plan is flexible and may be adapted to fit current conditions.

Stage I - Voluntary Conservation Actions and Mandatory Prohibitions

The following list identifies specific voluntary and mandatory conservation actions that Hayward customers are asked to take during a Stage I rationing effort. Hayward would implement a public information campaign to specifically address the situation.

Voluntary Actions

- Limit irrigation to early morning and evening hours to reduce evaporation
- Install water saving fixtures and appliances
- Ensure full loads in dishwashers and clothes washing machines

Mandatory Prohibitions

- Any use of water that results in significant runoff to streets, driveways or sidewalks
- Irrigation of lawns, landscaping or other vegetated areas in a manner that allows significant amounts of potable water to flow onto adjacent property, non-irrigated areas, private and public walkways, roadways, or parking lots
- Irrigation of lawns, landscaping or other vegetated areas more than two days per week
- Irrigation of lawns, landscaping or other vegetated areas during and 48 hours following measureable precipitation
- Serving water in restaurants and bars (unless specifically asked by customer)
- Washing towels and linens on a daily basis in hotels and motels (unless specifically asked by the customer)
- Use of potable water due to broken or defective plumbing or irrigation systems
- Use of potable water to wash sidewalks, driveways, parking lots, buildings, and other outdoor areas and structures
- Use of a hose for any purpose, including vehicle washing, unless the hose is equipped with a shut-off nozzle that causes it to cease dispensing water immediately when not in use
- Use of potable water in decorative water fountains or other ornamental water features unless water is recirculated

Stage II and III – Additional Mandatory Actions

Table 5-13 lists additional mandatory prohibitions and the rationing stage at which they would be implemented.

Table 5-13
Water Use Prohibitions

Prohibition	Stage When Prohibition Becomes Mandatory
• Water use in excess of allocation (implement rate structure appropriate to the shortage) • Filling or refilling swimming pools, spas or hot tubs • Washing vehicles, except in commercial carwashes • Using potable water in construction activities unless no other water is available	Stage II (10% to 20% reduction)
• Continuation of all Stage II prohibitions • Using potable water for cooling purposes and commercial car washes, unless recycled • Using potable water for golf course irrigation • Use of potable water for street sweeping • Use of potable water to irrigate landscaping in new developments	Stage III (20 to 50% reduction)

Source: City of Hayward draft ordinances and resolutions

Stage IV – Additional Reductions

In a Stage IV rationing effort, the City would intensify all of the prohibitions as listed in Table 6-13. Additional measures would be added to achieve savings. The majority of additional savings would come from further reduced customer allocations.

Executive Department
State of California

EXECUTIVE ORDER B-29-15

WHEREAS on January 17, 2014, I proclaimed a State of Emergency to exist throughout the State of California due to severe drought conditions; and

WHEREAS on April 25, 2014, I proclaimed a Continued State of Emergency to exist throughout the State of California due to the ongoing drought; and

WHEREAS California's water supplies continue to be severely depleted despite a limited amount of rain and snowfall this winter, with record low snowpack in the Sierra Nevada mountains, decreased water levels in most of California's reservoirs, reduced flows in the state's rivers and shrinking supplies in underground water basins; and

WHEREAS the severe drought conditions continue to present urgent challenges including: drinking water shortages in communities across the state, diminished water for agricultural production, degraded habitat for many fish and wildlife species, increased wildfire risk, and the threat of saltwater contamination to fresh water supplies in the Sacramento-San Joaquin Bay Delta; and

WHEREAS a distinct possibility exists that the current drought will stretch into a fifth straight year in 2016 and beyond; and

WHEREAS new expedited actions are needed to reduce the harmful impacts from water shortages and other impacts of the drought; and

WHEREAS the magnitude of the severe drought conditions continues to present threats beyond the control of the services, personnel, equipment, and facilities of any single local government and require the combined forces of a mutual aid region or regions to combat; and

WHEREAS under the provisions of section 8558(b) of the Government Code, I find that conditions of extreme peril to the safety of persons and property continue to exist in California due to water shortage and drought conditions with which local authority is unable to cope; and

WHEREAS under the provisions of section 8571 of the California Government Code, I find that strict compliance with various statutes and regulations specified in this order would prevent, hinder, or delay the mitigation of the effects of the drought.

NOW, THEREFORE, I, EDMUND G. BROWN JR., Governor of the State of California, in accordance with the authority vested in me by the Constitution and statutes of the State of California, in particular Government Code sections 8567 and 8571 of the California Government Code, do hereby issue this Executive Order, effective immediately.

IT IS HEREBY ORDERED THAT:

1. The orders and provisions contained in my January 17, 2014 Proclamation, my April 25, 2014 Proclamation, and Executive Orders B-26-14 and B-28-14 remain in full force and effect except as modified herein.

SAVE WATER

2. The State Water Resources Control Board (Water Board) shall impose restrictions to achieve a statewide 25% reduction in potable urban water usage through February 28, 2016. These restrictions will require water suppliers to California's cities and towns to reduce usage as compared to the amount used in 2013. These restrictions should consider the relative per capita water usage of each water suppliers' service area, and require that those areas with high per capita use achieve proportionally greater reductions than those with low use. The California Public Utilities Commission is requested to take similar action with respect to investor-owned utilities providing water services.

3. The Department of Water Resources (the Department) shall lead a statewide initiative, in partnership with local agencies, to collectively replace 50 million square feet of lawns and ornamental turf with drought tolerant landscapes. The Department shall provide funding to allow for lawn replacement programs in underserved communities, which will complement local programs already underway across the state.

4. The California Energy Commission, jointly with the Department and the Water Board, shall implement a time-limited statewide appliance rebate program to provide monetary incentives for the replacement of inefficient household devices.

5. The Water Board shall impose restrictions to require that commercial, industrial, and institutional properties, such as campuses, golf courses, and cemeteries, immediately implement water efficiency measures to reduce potable water usage in an amount consistent with the reduction targets mandated by Directive 2 of this Executive Order.

6. The Water Board shall prohibit irrigation with potable water of ornamental turf on public street medians.

7. The Water Board shall prohibit irrigation with potable water outside of newly constructed homes and buildings that is not delivered by drip or microspray systems.

8. The Water Board shall direct urban water suppliers to develop rate structures and other pricing mechanisms, including but not limited to surcharges, fees, and penalties, to maximize water conservation consistent with statewide water restrictions. The Water Board is directed to adopt emergency regulations, as it deems necessary, pursuant to Water Code section 1058.5 to implement this directive. The Water Board is further directed to work with state agencies and water suppliers to identify mechanisms that would encourage and facilitate the adoption of rate structures and other pricing mechanisms that promote water conservation. The California Public Utilities Commission is requested to take similar action with respect to investor-owned utilities providing water services.

INCREASE ENFORCEMENT AGAINST WATER WASTE

9. The Water Board shall require urban water suppliers to provide monthly information on water usage, conservation, and enforcement on a permanent basis.

10. The Water Board shall require frequent reporting of water diversion and use by water right holders, conduct inspections to determine whether illegal diversions or wasteful and unreasonable use of water are occurring, and bring enforcement actions against illegal diverters and those engaging in the wasteful and unreasonable use of water. Pursuant to Government Code sections 8570 and 8627, the Water Board is granted authority to inspect property or diversion facilities to ascertain compliance with water rights laws and regulations where there is cause to believe such laws and regulations have been violated. When access is not granted by a property owner, the Water Board may obtain an inspection warrant pursuant to the procedures set forth in Title 13 (commencing with section 1822.50) of Part 3 of the Code of Civil Procedure for the purposes of conducting an inspection pursuant to this directive.

11. The Department shall update the State Model Water Efficient Landscape Ordinance through expedited regulation. This updated Ordinance shall increase water efficiency standards for new and existing landscapes through more efficient irrigation systems, greywater usage, onsite storm water capture, and by limiting the portion of landscapes that can be covered in turf. It will also require reporting on the implementation and enforcement of local ordinances, with required reports due by December 31, 2015. The Department shall provide information on local compliance to the Water Board, which shall consider adopting regulations or taking appropriate enforcement actions to promote compliance. The Department shall provide technical assistance and give priority in grant funding to public agencies for actions necessary to comply with local ordinances.

12. Agricultural water suppliers that supply water to more than 25,000 acres shall include in their required 2015 Agricultural Water Management Plans a detailed drought management plan that describes the actions and measures the supplier will take to manage water demand during drought. The Department shall require those plans to include quantification of water supplies and demands for 2013, 2014, and 2015 to the extent data is available. The Department will provide technical assistance to water suppliers in preparing the plans.

13. Agricultural water suppliers that supply water to 10,000 to 25,000 acres of irrigated lands shall develop Agricultural Water Management Plans and submit the plans to the Department by July 1, 2016. These plans shall include a detailed drought management plan and quantification of water supplies and demands in 2013, 2014, and 2015, to the extent that data is available. The Department shall give priority in grant funding to agricultural water suppliers that supply water to 10,000 to 25,000 acres of land for development and implementation of Agricultural Water Management Plans.

14. The Department shall report to Water Board on the status of the Agricultural Water Management Plan submittals within one month of receipt of those reports.

15. Local water agencies in high and medium priority groundwater basins shall immediately implement all requirements of the California Statewide Groundwater Elevation Monitoring Program pursuant to Water Code section 10933. The Department shall refer noncompliant local water agencies within high and medium priority groundwater basins to the Water Board by December 31, 2015, which shall consider adopting regulations or taking appropriate enforcement to promote compliance.

16. The California Energy Commission shall adopt emergency regulations establishing standards that improve the efficiency of water appliances, including toilets, urinals, and faucets available for sale and installation in new and existing buildings.

INVEST IN NEW TECHNOLOGIES

17. The California Energy Commission, jointly with the Department and the Water Board, shall implement a Water Energy Technology (WET) program to deploy innovative water management technologies for businesses, residents, industries, and agriculture. This program will achieve water and energy savings and greenhouse gas reductions by accelerating use of cutting-edge technologies such as renewable energy-powered desalination, integrated on-site reuse systems, water-use monitoring software, irrigation system timing and precision technology, and on-farm precision technology.

STREAMLINE GOVERNMENT RESPONSE

18. The Office of Emergency Services and the Department of Housing and Community Development shall work jointly with counties to provide temporary assistance for persons moving from housing units due to a lack of potable water who are served by a private well or water utility with less than 15 connections, and where all reasonable attempts to find a potable water source have been exhausted.

19. State permitting agencies shall prioritize review and approval of water infrastructure projects and programs that increase local water supplies, including water recycling facilities, reservoir improvement projects, surface water treatment plants, desalination plants, stormwater capture, and greywater systems. Agencies shall report to the Governor's Office on applications that have been pending for longer than 90 days.

20. The Department shall take actions required to plan and, if necessary, implement Emergency Drought Salinity Barriers in coordination and consultation with the Water Board and the Department of Fish and Wildlife at locations within the Sacramento - San Joaquin delta estuary. These barriers will be designed to conserve water for use later in the year to meet state and federal Endangered Species Act requirements, preserve to the extent possible water quality in the Delta, and retain water supply for essential human health and safety uses in 2015 and in the future.

21. The Water Board and the Department of Fish and Wildlife shall immediately consider any necessary regulatory approvals for the purpose of installation of the Emergency Drought Salinity Barriers.

22. The Department shall immediately consider voluntary crop idling water transfer and water exchange proposals of one year or less in duration that are initiated by local public agencies and approved in 2015 by the Department subject to the criteria set forth in Water Code section 1810.

23. The Water Board will prioritize new and amended safe drinking water permits that enhance water supply and reliability for community water systems facing water shortages or that expand service connections to include existing residences facing water shortages. As the Department of Public Health's drinking water program was transferred to the Water Board, any reference to the Department of Public Health in any prior Proclamation or Executive Order listed in Paragraph 1 is deemed to refer to the Water Board.

24. The California Department of Forestry and Fire Protection shall launch a public information campaign to educate the public on actions they can take to help to prevent wildfires including the proper treatment of dead and dying trees. Pursuant to Government Code section 8645, $1.2 million from the State Responsibility Area Fire Prevention Fund (Fund 3063) shall be allocated to the California Department of Forestry and Fire Protection to carry out this directive.

25. The Energy Commission shall expedite the processing of all applications or petitions for amendments to power plant certifications issued by the Energy Commission for the purpose of securing alternate water supply necessary for continued power plant operation. Title 20, section 1769 of the California Code of Regulations is hereby waived for any such petition, and the Energy Commission is authorized to create and implement an alternative process to consider such petitions. This process may delegate amendment approval authority, as appropriate, to the Energy Commission Executive Director. The Energy Commission shall give timely notice to all relevant local, regional, and state agencies of any petition subject to this directive, and shall post on its website any such petition.

26. For purposes of carrying out directives 2–9, 11, 16–17, 20–23, and 25, Division 13 (commencing with section 21000) of the Public Resources Code and regulations adopted pursuant to that Division are hereby suspended. This suspension applies to any actions taken by state agencies, and for actions taken by local agencies where the state agency with primary responsibility for implementing the directive concurs that local action is required, as well as for any necessary permits or approvals required to complete these actions. This suspension, and those specified in paragraph 9 of the January 17, 2014 Proclamation, paragraph 19 of the April 25, 2014 proclamation, and paragraph 4 of Executive Order B-26-14, shall remain in effect until May 31, 2016. Drought relief actions taken pursuant to these paragraphs that are started prior to May 31, 2016, but not completed, shall not be subject to Division 13 (commencing with section 21000) of the Public Resources Code for the time required to complete them.

27. For purposes of carrying out directives 20 and 21, section 13247 and Chapter 3 of Part 3 (commencing with section 85225) of the Water Code are suspended.

28. For actions called for in this proclamation in directive 20, the Department shall exercise any authority vested in the Central Valley Flood Protection Board, as codified in Water Code section 8521, et seq., that is necessary to enable these urgent actions to be taken more quickly than otherwise possible. The Director of the Department of Water Resources is specifically authorized, on behalf of the State of California, to request that the Secretary of the Army, on the recommendation of the Chief of Engineers of the Army Corps of Engineers, grant any permission required pursuant to section 14 of the Rivers and Harbors Act of 1899 and codified in section 48 of title 33 of the United States Code.

29. The Department is directed to enter into agreements with landowners for the purposes of planning and installation of the Emergency Drought Barriers in 2015 to the extent necessary to accommodate access to barrier locations, land-side and water-side construction, and materials staging in proximity to barrier locations. Where the Department is unable to reach an agreement with landowners, the Department may exercise the full authority of Government Code section 8572.

30. For purposes of this Executive Order, chapter 3.5 (commencing with section 11340) of part 1 of division 3 of the Government Code and chapter 5 (commencing with section 25400) of division 15 of the Public Resources Code are suspended for the development and adoption of regulations or guidelines needed to carry out the provisions in this Order. Any entity issuing regulations or guidelines pursuant to this directive shall conduct a public meeting on the regulations and guidelines prior to adopting them.

31. In order to ensure that equipment and services necessary for drought response can be procured quickly, the provisions of the Government Code and the Public Contract Code applicable to state contracts, including, but not limited to, advertising and competitive bidding requirements, are hereby suspended for directives 17, 20, and 24. Approval by the Department of Finance is required prior to the execution of any contract entered into pursuant to these directives.

This Executive Order is not intended to, and does not, create any rights or benefits, substantive or procedural, enforceable at law or in equity, against the State of California, its agencies, departments, entities, officers, employees, or any other person.

I FURTHER DIRECT that as soon as hereafter possible, this Order be filed in the Office of the Secretary of State and that widespread publicity and notice be given to this Order.

IN WITNESS WHEREOF I have hereunto set my hand and caused the Great Seal of the State of California to be affixed this 1st day of April 2015.

EDMUND G. BROWN JR.
Governor of California

ATTEST:

ALEX PADILLA
Secretary of State

ADOPTED TEXT OF EMERGENCY REGULATION

Article 22.5. Drought Emergency Water Conservation.

Sec. 863. Findings of Drought Emergency.

(a) The State Water Resources Control Board finds as follows:

(1) On January 17, 2014, the Governor issued a proclamation of a state of emergency under the California Emergency Services Act based on drought conditions;

(2) On April 25, 2014, the Governor issued a proclamation of a continued state of emergency under the California Emergency Services Act based on continued drought conditions;

(3) On April 1, 2015, the Governor issued an Executive Order that, in part, directs the State Board to impose restrictions on water suppliers to achieve a statewide 25 percent reduction in potable urban usage through February, 2016; require commercial, industrial, and institutional users to implement water efficiency measures; prohibit irrigation with potable water of ornamental turf in public street medians; and prohibit irrigation with potable water outside newly constructed homes and buildings that is not delivered by drip or microspray systems;

(4) The drought conditions that formed the basis of the Governor's emergency proclamations continue to exist;

(5) The present year is critically dry and has been immediately preceded by two or more consecutive below normal, dry, or critically dry years; and

(6) The drought conditions will likely continue for the foreseeable future and additional action by both the State Water Resources Control Board and local water suppliers will likely be necessary to prevent waste and unreasonable use of water and to further promote conservation.

Authority: Section 1058.5, Water Code.
References: Cal. Const., Art., X § 2; Sections 102, 104, 105, and 275, Water Code; *Light v. State Water Resources Control Board* (2014) 226 Cal.App.4th 1463.

Sec. 864. End-User Requirements in Promotion of Water Conservation.

(a) To prevent the waste and unreasonable use of water and to promote water conservation, each of the following actions is prohibited, except where necessary to address an immediate health and safety need or to comply with a term or condition in a permit issued by a state or federal agency:

(1) The application of potable water to outdoor landscapes in a manner that causes runoff such that water flows onto adjacent property, non-irrigated areas, private and public walkways, roadways, parking lots, or structures;

(2) The use of a hose that dispenses potable water to wash a motor vehicle, except where the hose is fitted with a shut-off nozzle or device attached to it that causes it to cease dispensing water immediately when not in use;

(3) The application of potable water to driveways and sidewalks; and

(4) The use of potable water in a fountain or other decorative water feature, except where the water is part of a recirculating system;

(5) The application of potable water to outdoor landscapes during and within 48 hours after measurable rainfall;

(6) The serving of drinking water other than upon request in eating or drinking establishments, including but not limited to restaurants, hotels, cafes, cafeterias, bars, or other public places where food or drink are served and/or purchased;

(7) The irrigation with potable water of ornamental turf on public street medians; and

(8) The irrigation with potable water of landscapes outside of newly constructed homes and buildings in a manner inconsistent with regulations or other requirements established by the California Building Standards Commission and the Department of Housing and Community Development.

(b) To promote water conservation, operators of hotels and motels shall provide guests with the option of choosing not to have towels and linens laundered daily. The hotel or motel shall prominently display notice of this option in each guestroom using clear and easily understood language.

(c) Immediately upon this subdivision taking effect, all commercial, industrial and institutional properties that use a water supply, any portion of which is from a source other than a water supplier subject to section 865, shall either:

(1) Limit outdoor irrigation of ornamental landscapes or turf with potable water to no more than two days per week; or

(2) Reduce potable water usage supplied by sources other than a water supplier by 25 percent for the months of June 2015 through February 2016 as compared to the amount used from those sources for the same months in 2013.

(d) The taking of any action prohibited in subdivision (a) or the failure to take any action required in subdivisions (b) or (c), is an infraction, punishable by a fine of up to five hundred dollars ($500) for each day in which the violation occurs. The fine for the infraction is in addition to, and does not supersede or limit, any other remedies, civil or criminal.

Authority: Section 1058.5, Water Code.
References: Cal. Const., Art., X § 2; Sections 102, 104, 105, 275, 350, and 10617, Water Code; *Light v. State Water Resources Control Board* (2014) 226 Cal.App.4th 1463.

Sec. 865. Mandatory Actions by Water Suppliers.

(a) As used in this section:

(1) "Distributor of a public water supply" has the same meaning as under section 350 of the Water Code, except it does not refer to such distributors when they are functioning solely in a wholesale capacity, but does apply to distributors when they are functioning in a retail capacity.

(2) "R-GPCD" means residential gallons per capita per day.

(3) "Total potable water production" means all potable water that enters into a water supplier's distribution system, excluding water placed into storage and not withdrawn for use during the reporting period, or water exported outsider the supplier's service area.

(4) "Urban water supplier" means a supplier that meets the definition set forth in Water Code section 10617, except it does not refer to suppliers when they are functioning solely in a wholesale capacity, but does apply to suppliers when they are functioning in a retail capacity.

(b) In furtherance of the promotion of water conservation each urban water supplier shall:

(1) Provide prompt notice to a customer whenever the supplier obtains information that indicates that a leak may exist within the end-user's exclusive control.

(2) Prepare and submit to the State Water Resources Control Board by the 15th of each month a monitoring report on forms provided by the Board. The monitoring report shall include the amount of potable water the urban water supplier produced, including water provided by a wholesaler, in the preceding calendar month and shall compare that amount to the amount produced in the same calendar month in 2013. The monitoring report shall specify the population served by the urban water supplier, the percentage of water produced that is used for the residential sector, descriptive statistics on water conservation compliance and enforcement efforts, and the number of days that outdoor irrigation is allowed, and monthly commercial, industrial and institutional sector use. The monitoring report shall also estimate the gallons of water per person per day used by the residential customers it serves.

(c)(1) To prevent the waste and unreasonable use of water and to meet the requirements of the Governor's April 1, 2015 Executive Order, each urban water supplier shall reduce its total potable water production by the percentage identified as its conservation standard in this subdivision. Each urban water supplier's conservation standard considers its service area's relative per capita water usage.

(2) Each urban water supplier whose source of supply does not include groundwater or water imported from outside the hydrologic region in which the water supplier is located, and that has a minimum of four years' reserved supply available may, submit to the Executive Director for approval a request that, in lieu of the reduction that would otherwise be required under paragraphs (3) through (10), the urban water supplier shall reduce its total potable water production by 4 percent for each month as compared to the amount used in the same month in 2013. Any such request shall be accompanied by information showing that the supplier's sources of supply do not include groundwater or water imported from outside the hydrologic region and that the supplier has a minimum of four years' reserved supply available.

(3) Each urban water supplier whose average July-September 2014 R-GPCD was less than 65 shall reduce its total potable water production by 8 percent for each month as compared to the amount used in the same month in 2013.

(4) Each urban water supplier whose average July-September 2014 R-GPCD was 65 or more but less than 80 shall reduce its total potable water production by 12 percent for each month as compared to the amount used in the same month in 2013.

(5) Each urban water supplier whose average July-September 2014 R-GPCD was 80 or more but less than 95 shall reduce its total potable water production by 16 percent for each month as compared to the amount used in the same month in 2013.

(6) Each urban water supplier whose average July-September 2014 R-GPCD was 95 or more but less than 110 shall reduce its total potable water production by 20 percent for each month as compared to the amount used in the same month in 2013.

(7) Each urban water supplier whose average July-September 2014 R-GPCD was 110 or more but less than 130 shall reduce its total potable water production by 24 percent for each month as compared to the amount used in the same month in 2013.

(8) Each urban water supplier whose average July-September 2014 R-GPCD was 130 or more but less than 170 shall reduce its total potable water production by 28 percent for each month as compared to the amount used in the same month in 2013.

(9) Each urban water supplier whose average July-September 2014 R-GPCD was 170 or more but less than 215 shall reduce its total potable water production by 32 percent for each month as compared to the amount used in the same month in 2013.

(10) Each urban water supplier whose average July-September 2014 R-GPCD was 215 or more shall reduce its total potable water production by 36 percent for each month as compared to the amount used in the same month in 2013.

(d)(1) Beginning June 1, 2015, each urban water supplier shall comply with the conservation standard specified in subdivision (c).

(2) Compliance with the requirements of this subdivision shall be measured monthly and assessed on a cumulative basis.

(e)(1) Each urban water supplier that provides potable water for commercial agricultural use meeting the definition of Government Code section 51201, subdivision (b), may subtract the amount of water provided for commercial agricultural use from its potable water production total, provided that any urban water supplier that subtracts any water provided for commercial agricultural use from its total potable water production shall:

(A) Impose reductions determined locally appropriate by the urban water supplier, after considering the applicable urban water supplier conservation standard specified in subdivision (c), for commercial agricultural users meeting the definition of Government Code section 51201, subdivision (b) served by the supplier;

(B) Report its total potable water production pursuant to subdivision (b)(2) of this section, the total amount of water supplied for commercial agricultural use, and shall identify the reduction imposed on its commercial agricultural users and each recipient of potable water for commercial agricultural use;

(C) Certify that the agricultural uses it serves meet the definition of Government Code section 51201, subdivision (b); and

(D) Comply with the Agricultural Water Management Plan requirement of paragraph 12 of the April 1, 2015 Executive Order for all commercial agricultural water served by the supplier that is subtracted from its total potable water production.

(2) Submitting any information pursuant to subdivision (e)(1)(B) or (C) of this section that is found to be materially false by the board is a violation of this regulation, punishable by civil liability of up to five hundred dollars ($500) for each day in which the violation occurs. Every day that the error goes uncorrected constitutes a separate violation. Civil liability for the violation is in addition to, and does not supersede or limit, any other remedies, civil or criminal.

(f)(1) To prevent waste and unreasonable use of water and to promote water conservation, each distributor of a public water supply that is not an urban water supplier shall take one or more of the following actions:

(A) Limit outdoor irrigation of ornamental landscapes or turf with potable water by the persons it serves to no more than two days per week; or

(B) Reduce by 25 percent reduction its total potable water production relative to the amount produced in 2013.

(2) Each distributor of a public water supply that is not an urban water supplier shall submit a report by December 15, 2015, on a form provided by the Board, that either confirms compliance with subdivision (f)(1)(A) or identifies total potable water production, by month, from June through November, 2015, and total potable water production, by month, for June through November 2013.

Authority: Section 1058.5, Water Code.
References: Cal. Const., Art., X § 2; Sections 102, 104, 105, 275, 350, 1846, 10617 and 10632, Water Code; *Light v. State Water Resources Control Board* (2014) 226 Cal.App.4th 1463.

Sec. 866. Additional Conservation Tools.

(a)(1) To prevent the waste and unreasonable use of water and to promote conservation, when a water supplier does not meet its conservation standard required by section 865 the Executive Director, or the Executive Director's designee, may issue conservation orders requiring additional actions by the supplier to come into compliance with its conservation standard.

(2) A decision or order issued under this article by the board or an officer or employee of the board is subject to reconsideration under article 2 (commencing with section 1122) of chapter 4 of part 1 of division 2 of the California Water Code.

(b) The Executive Director, or his designee, may issue an informational order requiring water suppliers, or commercial, industrial or institutional properties that receive any portion of their supply from a source other than a water supplier subject to section 865, to submit additional information relating to water production, water use or water conservation. The failure to provide the information requested within 30 days or any additional time extension granted is a violation subject to civil liability of up to $500 per day for each day the violation continues pursuant to Water Code section 1846.

Authority: Section 1058.5, Water Code.
References: Cal. Const., Art., X § 2; Sections 100, 102, 104, 105, 174, 186, 187, 275, 350, 1051, 1122, 1123, 1825, 1846, 10617 and 10632, Water Code; *Light v. State Water Resources Control Board* (2014) 226 Cal.App.4th 1463.

CITY OF
HAYWARD
HEART OF THE BAY

DATE: June 18, 2015

TO: City Council Sustainability Committee

FROM: Director of Utilities and Environmental Services

SUBJECT: Water Pollution Control Facility (WPCF) Clean and Renewable Energy

RECOMMENDATION

That the Committee reviews and comments on this report.

BACKGROUND

The City of Hayward's WPCF is a Bay Area leader in using renewable energy including solar power and biogas powered cogeneration facilities. The City's goals in using renewable energy includes reducing greenhouse gas (GHG) emissions, improving air quality, reducing energy costs, and improving reliability of energy sources available to power the City's WPCF. The City's WPCF is transitioning from a facility that treats and discharges wastewater into the bay to a resource recovery facility. Resource recovery efforts include use of renewable energy from solar, green power (by use of digester gas) as fuel for the production of heat and power, or "cogeneration", and use of recycled water for cooling at the adjacent Russell City Energy Center (RCEC).

The WPCF is the largest energy consumer owned by the City with a total plant demand of approximately 8,000,000 kilowatt hours (kWh) annually. Prior to constructing the solar facility, approximately 37% of the plant's demand was satisfied by the cogeneration system, and the rest came from power purchased from PG&E. In December of 2010, the one megawatt solar facility came on line satisfying an average of 20% of the plant's demand with resulting decreased reliance on PG&E power to 43% of plant demand. During peak hours, power from solar exceeds plant demand with the resulting excess power exported to the grid through a net energy meter.

In November of 2014, the new 1,132 kW cogeneration facility was completed and commissioned replacing the existing cogeneration system. At the same time, the City switched to the Renewable Energy Self-Generation Bill Credit Transfer (RES-BCT) tariff. These RES-BCT tariffs allow local governments to generate electricity at one account, and based on the value of any exported electricity, transfer bill credits (in dollars) to another account owned by the same local government within the same city or county. Since March 2015, the new combined heat and power system has satisfied all plant demand and has resulted in excess power exported to the grid. In addition, because the new system satisfies plant demand, all of the solar power produced

at the plant is also exported to the grid. In May of 2015, 365,500 kWh of excess energy was exported and used at other benefitting accounts within the City under the RES-BCT tariff.

Fats, Oils, and Grease (FOG) Receiving Station

In January of 2013, the City completed construction of a new Fats, Oils, and Grease (FOG) receiving station. The purpose of a FOG receiving station is to receive fats, oils, and grease which are primarily removed in the process of servicing restaurants and food processing grease interceptors. Given their energy content when added to the City's digesters at the WPCF, they help increase bio-gas production. The FOG facility was constructed following a pilot study evaluating the potential for increased gas production from receiving FOG for direct injection into the digesters. The FOG facility was constructed in anticipation of the need to replace the existing aged cogeneration system with a newer facility capable of utilizing the excess gas with the benefit of producing more energy that can be used at the plant. FOG originates from several sources, predominantly from restaurant grease interceptors, grocery stores, and food processing facilities. Disposing of these materials is challenging as they are not typically permitted to be discharged into sanitary sewers. Wastewater treatment facilities have become increasingly aware of the potential benefits in recovering this wastestream and utilizing it as a food source in the digestion process with the benefit of increased gas production.

New Cogeneration (Combined Heat & Power) Facility

A new cogeneration facility was constructed to replace the existing cogen system that had reached the end of its useful life. After an extensive planning process that included review of available technologies, sizing, and economic analysis, the City selected and installed a 1,132 kW clean burning internal combustion engine, with a provision to add a second unit in the future. The new facility was commissioned and placed into operation in November 2014 replacing the old facility. The newer engines are twice as efficient as the old engines. The new system produces nearly three times more energy than the old system due to the larger, more powerful engine and improved efficiency. In addition to electric energy (power), they produce heat which is captured and used in the plant's hot water loop for heating the digesters.

Energy Summary

A summary of the plant's annual energy usage and source is presented in Attachment I. Since coming on line in December 2014, the cogeneration power produced at the plant has averaged around 750,000 kWh monthly. At the same time, cogen power exported to the grid began and increased to 145,000 kWh in the month of May. Solar power used at the plant decreased from an average of 147,000 kWh to zero in the month of May, so all solar energy was exported to PG&E.

Renewable Energy Self-Generation Bill Credit Transfer (RES-BCT) Tariff

The City of Hayward was the first city in the Pacific Gas and Electric service area to be covered under the Renewable Energy Self-Generation Bill Credit Transfer (RES-BCT) tariff. The RES-BCT tariffs were approved by the CPUC in accordance with Public Utilities Code 2830, which was statute created by AB 2466 in 2008. These RES-BCT tariffs allow local governments to

generate electricity at one account and based on the value of any exported electricity, transfer bill credits (in dollars) to another account owned by the same local government within the same city or county. The City receives annual savings of about $300,000 from the new cogeneration facility and solar combined. These savings are to be spread amongst several utilities facilities. As of June 2014, PG&E has four customers that have implemented RES-BCT. The City of Hayward is the only publicly owned treatment works and the largest RES-BCT interconnection at this time.

Solar Photovoltaic

In November 2009, City Council authorized the construction of a 1,000 kW photovoltaic solar energy system at the WPCF. The solar project took advantage of available incentives at the time from PG&E with the goal to reduce greenhouse gases and other air pollutants associated with "brown energy" purchased from PG&E. Construction of the solar array was completed in January of 2011 and consists of 5,152 panels occupying about eight acres of former ponds west of the WPCF site formerly used for storage of treatment plant solids. The primary goals that were achieved from this project include:

1. Allowing the WPCF to utilize solar energy to partially offset energy purchased from PG&E and to sell excess energy back to PG&E during periods of peak energy production when solar power combined with cogeneration power exceeds plant demands;
2. Reducing the carbon footprint associated with the WPCF operations in accordance with one of the objectives of the City's Climate Action Plan.

Since January 2011, the solar facility has produced on average approximately 2,360,000 kW-hr/year. Prior to the new cogeneration facility coming on line, approximately 70 % of the solar energy produced was used at the plant, with the excess power sent to PG&E via the net energy meter. Since the new cogeneration facility came on line, nearly all of the solar energy produced is sent to the grid. The benefit is even greater when considering that peak solar production periods of summer moths and midday coincide with periods of peak energy demands on the PG&E grid.

Future Efforts – Digester Improvements Project

Design efforts are currently underway to improve the WPCF's existing digesters. Among those improvements include plans to improve the blending and mixing systems for the digester feed. This will improve digester performance resulting in an increase in the production of biogas and thereby combined heat and power production.

Future Efforts – Solar Field

The WPCF has additional out-of-service ponds that are underutilized to the north of the existing solar field. Plans are underway to construct an additional one megawatt solar facility on that site. The City has already started accepting soils and started grading operations for the future solar facility.

Prepared by: Suzan England, Senior Utilities Engineer

Recommended by: Alex Ameri, Director of Utilities and Environmental Services

Approved by:

Fran David, City Manager

Attachments:

Attachment I: Plant Demand and Energy Sources Table

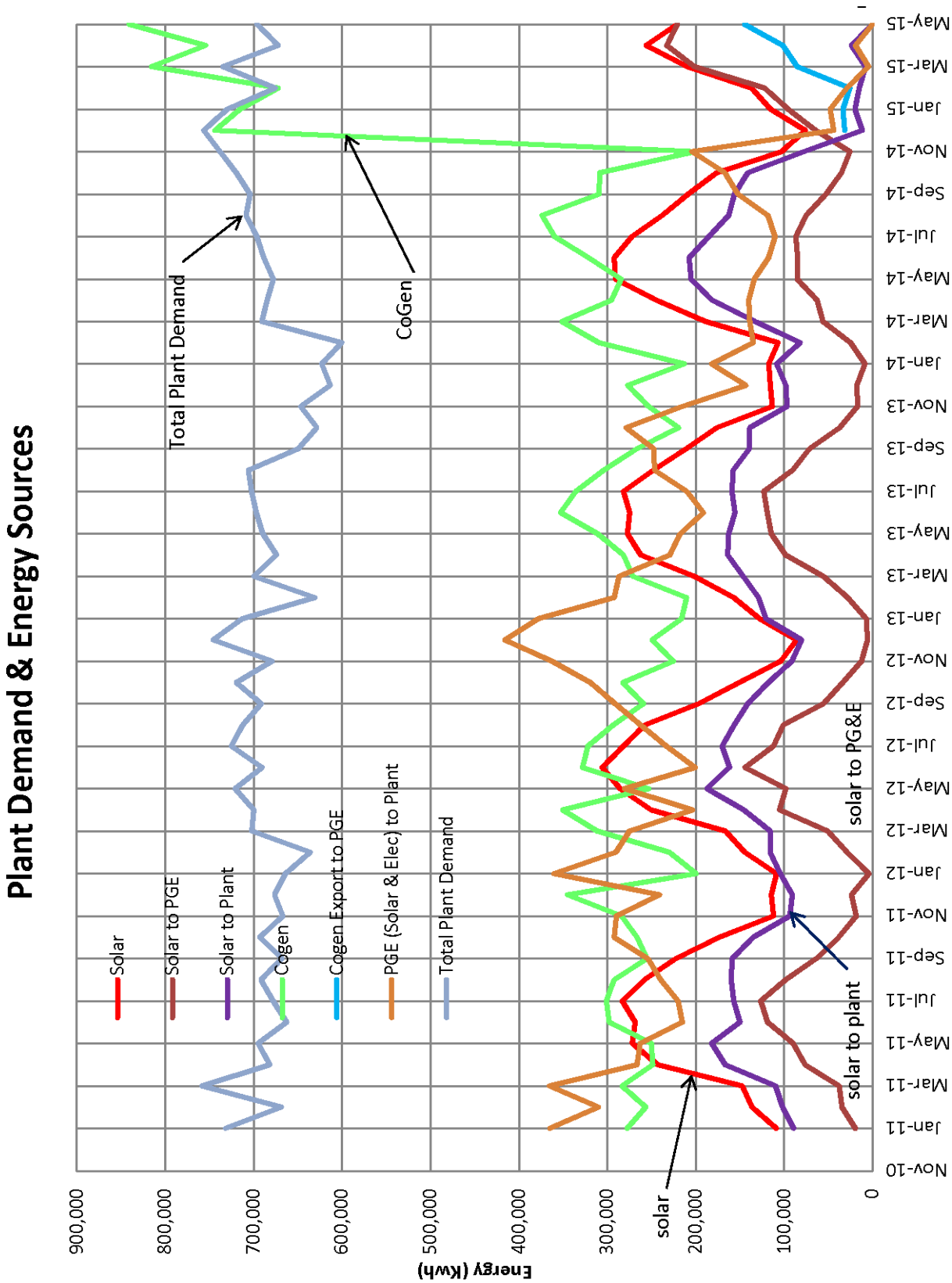
Plant Demand & Energy Sources
Solar
Solar to PGE
Solar to Plant
Cogen
Cogen Export to PGE
PGE (Solar & Elec) to Plant
Total Plant Demand
Total Plant Demand
CoGen
solar
solar to plant
solar to PG&E
Energy (kwh)
900,000
800,000
700,000
600,000
500,000
400,000
300,000
200,000
100,000
0
Nov-10
Jan-11
Mar-11
May-11
Jul-11
Sep-11
Nov-11
Jan-12
Mar-12
May-12
Jul-12
Sep-12
Nov-12
Jan-13
Mar-13
May-13
Jul-13
Sep-13
Nov-13
Jan-14
Mar-14
May-14
Jul-14
Sep-14
Nov-14
Jan-15
Mar-15
May-15

CITY OF HAYWARD
HEART OF THE BAY

DATE: June 18, 2014

TO: City Council Sustainability Committee

FROM: Director of Utilities & Environmental Services

SUBJECT: Property Assessed Clean Energy (PACE) – Consideration of New Programs

RECOMMENDATION

That the Committee reviews this report and recommends that the City Council approves resolutions to join the Home Energy Renovation Opportunity (HERO), Ygrene and Open PACE Programs.

SUMMARY

Access to financing for property owners to complete energy upgrades is a critical component of Hayward's Climate Action Plan. The City Council has previously authorized two PACE programs to operate in Hayward – CaliforniaFIRST in 2010 and Figtree Commercial PACE in 2014. Staff has been monitoring the PACE market as it has grown over the past year. The purpose of this report is to present three additional PACE programs for the Committee to consider for authorization: HERO PACE, Ygrene PACE, and Open PACE.

This report discusses the following developments in the PACE market:

1. Recent State legislation and programs are paving the way for PACE expansion.
2. PACE is increasingly being used to finance water efficiency improvements in light of the drought.
3. Cities like San Francisco and Berkeley are partnering with PACE providers to provide financing for their seismic retrofit programs.
4. The PACE Loss Reserve has taken the role of setting consumer protection standards for PACE programs statewide.
5. PACE programs continue to experience low default rates. In addition, HERO, Ygrene, and Open PACE have not initiated a single foreclosure since they began operations.

In light of the developments above, staff feels that it is in the City's interest to approve these three PACE programs. The City can provide additional consumer protection to Hayward property owners by including information on its website and offering PACE financing workshops.

BACKGROUND

General Plan Policies – Hayward's General Plan/Climate Action Plan, adopted on July 1, 2014, includes the following policies and implementation programs that support PACE financing:

> **Natural Resources Element, Program 9: Financing Program for Residential Energy Efficiency Retrofits** – The City shall work with regional agencies and organizations to develop a residential energy efficiency retrofit financing program for single-family and multi-family homes.
>
> **Natural Resources Element, Program 10: Financing Program for Commercial Energy Efficiency Retrofits** – The City shall work with regional agencies and organizations to develop a commercial energy efficiency retrofit financing program for commercial and industrial properties.

Property Assessed Clean Energy (PACE) programs allow property owners to finance energy and water efficiency improvements and pay off the debt through annual installments on their property tax bill. The intent of PACE programs is to provide an additional means of financing to make environmentally sustainable property improvements more affordable and accessible to property owners. In recent years, some PACE programs have also included seismic upgrades as an eligible improvement. The potential benefits of PACE financing over other financing options include 100% financing for eligible improvements, a longer repayment period of up to twenty years, and the reliability of pre-approved contractors.

PACE financing is a relatively new model. There are two pieces of legislation that enable PACE programs in California and several additional laws that clarify and expand this legislation.

California AB 811 (July 21, 2008) amended the Improvement Act of 1911, part of the Streets and Highways Code, to include renewable energy sources and energy efficiency upgrades in the list of public improvements that can be financed through an assessment district. California AB 474 (January 1, 2010) and California SB 1340 (September 30, 2010) expanded AB 811 to include water-efficiency improvements and the installation of charging stations for electric vehicles.

California SB 555 (October 5, 2011) amended the Mello-Roos Community Facilities Act of 1982 to include renewable energy sources, energy efficiency upgrades, and water efficiency upgrades in the list of public improvements that can be financed through a Mello-Roos Community Facility District. Proponents feel that SB 555 is a better law in concept, in part because it explicitly includes publicly owned properties. However in practice, SB 555 serves the same purpose as AB 811.

On September 26, 2013, Governor Brown signed SB 96, which created a $10 million PACE Loss Reserve to keep mortgage lenders whole during a foreclosure or a forced sale of a property with a PACE assessment. This reserve fund was established in response to Federal Housing Finance Agency (FHFA) concerns that residential PACE financing could pose a risk for Fannie Mae and Freddie Mac because PACE assessments are first-priority liens and are paid first in the case of foreclosure. In August 2010, Fannie Mae and Freddie Mac announced they would not purchase mortgages for homes with first lien priority PACE obligations. As a result, homeowners may need

to pay off their PACE assessment before they can sell their homes. This announcement put a significant halt on the expansion of the PACE market for several years. The FHFA has not changed its position to date, but the California PACE market has regained its momentum over the past two years, partially due to the PACE Loss Reserve.

On September 26, 2014, the State passed AB 1883 and AB 2597. These two bills pave the way for further expansion of the PACE financing model in California. AB 1883 allows governments to issue bonds for up to three years' worth of PACE deals, rather than for each individual project. This will reduce the administrative fees incurred and passed onto consumers. In addition, AB 1883 makes it easier to finance pre-paid solar leases with PACE and amends the Improvement Act of 1911 to make it more consistent with the Mello-Roos Act. AB 2597 modifies the PACE Loss Reserve legislation to increase the maximum allowed amount of a PACE assessment from 10% to 15% of the value of the property.

The City Council has authorized two PACE programs to operate in Hayward. The first program was CaliforniaFIRST, which the City Council approved on January 5, 2010[1]. CaliforniaFIRST is sponsored by the California Statewide Communities Development Authority JPA. It launched its non-residential program in September 2012. It re-launched its residential program[2] in August 2014, which had been on hold due to concerns from the Federal Housing Finance Agency. Because the City Council previously authorized CaliforniaFIRST to operate in Hayward, the residential program is now available to Hayward homeowners.

The City Council voted to join the Figtree PACE program on October 28, 2014[3]. Figtree Financing is sponsored by the California Enterprise Development Authority JPA. Figtree is a San Diego-based clean energy financing company that was founded in 2011. It currently only serves commercial properties. As recommended by the Council Sustainability Committee[4], the City Council limited Figtree's operating authority to commercial properties since Figtree has not yet set the terms for a potential residential program and there were concerns about consumer risks.

DISCUSSION

The Growing Trend towards an Open Market for PACE

As the market for PACE has grown and the fears of increased defaults have not been realized, more cities are being drawn to the benefits of offering multiple PACE programs to their property owners. These benefits include increased access to financing and expertise in different types of properties and improvements.

When the country's first PACE program launched in Berkeley in 2008, it was a new and untested financing mechanism. At that time, a handful of municipalities launched self-funded PACE programs. For example, Sonoma County created and continues to administer the Sonoma County Energy Independence Program (SCEIP).

[1] http://www.hayward-ca.gov/CITY-GOVERNMENT/CITY-COUNCIL-MEETINGS/rp/2010/rp010510-07.pdf
[2] https://californiafirst.org/
[3] http://www.hayward-ca.gov/CITY-GOVERNMENT/CITY-COUNCIL-MEETINGS/2014/CCA14PDF/cca102814full.pdf
[4] http://www.hayward-ca.gov/CITY-GOVERNMENT/COUNCIL-STANDING-COMMITTEES/COUNCIL-SUSTAINABILITY-COMMITTEE/2014/CSC-CCSC091114full.pdf

Since then, over 30 states have passed PACE-enabling legislation and private financing companies have entered the market by partnering with joint powers authorities (JPA) to establish and finance PACE programs. Most jurisdictions in California, including Hayward, have chosen to join such JPAs instead of administering their own programs. JPA sponsored PACE programs offer little risk to local jurisdictions because the JPA assumes the legal liability. Any bonds issued to finance projects are issued by the JPA, so the City has no obligation to the bonds.

When these JPA partnerships with private financing companies first became available several years ago, local jurisdictions were rightfully cautious and careful to vet each program to make sure it met their needs and did not create excessive risk for their property owners. Some jurisdictions felt it was safest and easiest to authorize only one PACE program to operate in their boundaries.

Since then, the idea of an "open market" for PACE providers has become widely accepted as the route forward. Advocacy groups like PACENow have supported an open PACE market for years, claiming that having multiple programs operating in the same jurisdiction helps build a stronger industry landscape and provides property owners more choices. Following suit, most PACE providers now allow or actively encourage jurisdictions to authorize multiple programs.

For example, as mentioned above, Sonoma County chose to create its own PACE program, SCEIP, in 2009. Several months ago, Sonoma County authorized CaliforniaFIRST and HERO to operate alongside SCEIP under an initiative it is calling the PACE Financing Marketplace. In addition, cities throughout Sonoma County have authorized Figtree and Ygrene. A primary benefit of having multiple PACE programs is the increased access to financing for property owners. SCEIP has financed more than $60 million in projects, but it only has $17 million available for future improvements. The County has estimated it needs $2 billion in home improvements to meet its greenhouse gas reduction target[5].

Different Programs, Different Expertise

Each PACE program has developed specific expertise and enhanced customer support. Giving property owners the option of all programs allows the property owner to use the program that best meets their needs.

For example, Ygrene is the first and only PACE program to have completed multifamily housing projects. Earlier this year, California Governor Jerry Brown established a multifamily PACE pilot in partnership with the MacArthur Foundation and the U.S. Department of Housing and Urban Development. The Pilot will enable PACE financing for certain affordable multifamily properties that have received funding from HUD and the California Housing Finance Agency. Because Ygrene has experience with financing multifamily projects, it is well poised to provide financing for this pilot program.

In addition to helping meet greenhouse gas reduction goals, there is a growing interest in how PACE programs can help Californians respond to the drought. HERO has launched a marketing and

[5] http://www.pressdemocrat.com/business/3939909-181/homeowners-face-dizzying-new-choices

outreach program specifically targeting water efficiency improvements to homeowners. Approximately 4% of HERO's projects are now water-related, including outdoor landscaping options, weather based irrigation systems, rainwater catchment systems, and high-efficiency devices.

There is also growing interest in how PACE programs can help California prepare for an earthquake. Open PACE includes the provider Alliance NRG, which has expertise in using PACE for seismic upgrades and is the only PACE program to set aside funding specifically for this purpose. San Francisco and Berkeley recently partnered with Alliance NRG to be the finance provider for their Mandatory Retrofit Programs. Ygrene will also finance seismic retrofits.

Hayward's Development Services Department is in the preliminary stages of establishing a voluntary seismic retrofit program for single-family homes. The program will use a pre-approved set of seismic retrofitting plans that were created by the Association of Bay Area Government's Resilience Program[6]. The plan set saves the homeowner the cost of hiring an engineer and can be used for older homes that meet certain criteria. There are 16,000 homes in Hayward that were built before 1973 and would be potential candidates for such a retrofit. The cost of this type of retrofit is between two and ten thousand dollars. Access to 100% financing options like PACE will likely increase the uptake of this voluntary program.

Balancing the Benefits of an Open PACE Market with Consumer Protection

As with most financing mechanisms, PACE programs can present risks to consumers. As the governing body responsible for authorizing PACE programs, the City of Hayward must weigh these potential risks against the benefits of greater consumer choice and increased access to financing. Because of this, staff has reviewed the program terms for HERO, YGrene and Open PACE. A summary of each program is provided below and a comparison table is provided in Attachment I.

With enough information, savvy property owners should be able to assess if PACE financing is a wise long-term investment for their particular circumstance. However, as we saw with the 2008 mortgage crisis, property owners don't always have the knowledge needed to make well-informed financing decisions and can fall prey to aggressive marketing tactics. Therefore, it is important that PACE programs include consumer protections and operate ethically.

PACE financing presents further complications for homeowners that have Fannie Mae or Freddie Mac mortgages or may want to sell in the future to a buyer that has a Fannie or Freddie mortgage. It's not prohibited for these homeowners to participate in the program, but they may be required to pay off the assessment first if they want to sell their home or refinance their mortgage. It is important that PACE programs fully inform homeowners of this potential risk before they enter into a PACE assessment.

Staff has been following the PACE market and has identified several trends that staff feels should mitigate consumer risk. First is the fact that the State of California and the Governor's Office are actively supporting the expansion of the PACE market as a tool to meet the State's climate goals. Governor Brown has tried on several occasions to convince the FHFA to change its position. While

[6] http://resilience.abag.ca.gov/residents/planset/

he has not succeeded, the FHFA has also chosen not to take enforcement action against participating jurisdictions or property owners as originally feared.

As mentioned above, the Governor signed legislation in 2013 to establish a PACE Loss Reserve to provide assurance to mortgage lenders. CaliforniaFIRST, Ygrene, Figtree and HERO are all participating in the Loss Reserve. PACE programs assert that the rate of foreclosure for their properties is lower than the national average. After a year of operation, the Loss Reserve has not yet received any claims, which supports this assertion.

The PACE Loss Reserve has also served the purpose of setting consumer protection standards for PACE programs statewide. In order to receive the benefits of the PACE Loss Reserve, PACE programs must first apply with the State and meet certain requirements. These requirements are included as Attachment II.

PACE Programs have learned from their experience over the past five years and have further refined their consumer protection mechanisms. For example, HERO now proactively identifies when one of their properties is going up for sale and offers training to the real estate agent on the assessment and the PACE improvements so potential buyers will be aware.

In light of these developments, staff feels that there are measures in place to mitigate consumer risks in the PACE market and that it is in the City's interest to pursue an open market model for PACE programs in Hayward. The City can further mitigate risks by providing consumer information on its website and offering financing workshops to interested property owners.

Home Energy Renovation Opportunity (HERO)
HERO launched in December 2011 for residential properties and December 2012 for commercial properties. Approximately 220 jurisdictions, covering 44% of the total households in California, have authorized HERO. It is sponsored by the Western Riverside Council of Governments. HERO has funded more than $617 million in projects and has a list of 1 million eligible products for its contractors to offer.

Ygrene Energy Fund
Ygrene launched in 2010 for residential, commercial, industrial, and agricultural properties. It operates under SB 555. Approximately 50 jurisdictions have authorized the program, which is sponsored by the Golden State Finance Authority (GSFA). Ygrene was launched by SCEIP cofounder Dennis Hunter, who realized the need for a more efficient administrative and financial PACE model. Ygrene claims that its financing is 100% tax deductible because it operates under SB 555 rather than AB 811. However, there is potential consumer liability involved with this deduction because there is no IRS code pertaining to PACE financing under SB 555.

Open PACE
Open PACE launched in 2015 and operates under AB 811. Approximately 20 jurisdictions have authorized the program since its recent launch. It is sponsored by the California Statewide Communities Development Authority (CSCDA). CSCDA founded Open PACE with the goal of creating a platform to vet and pre-qualify PACE providers so that local governments only need to

pass a single resolution to authorize multiple programs. Currently, Open PACE has only pre-qualified two PACE programs – California FIRST and AllianceNRG.

In Case of Default

PACE assessments are collected in the same manner as general property taxes and are subject to the same penalties and remedies in the event of delinquency and default. These remedies include fines and fees as well as judicial foreclosure. Judicial foreclosure is included as a remedy in the Improvement Act of 1911 and the Mello-Roos Community Facilities Act of 1982 to provide security for bondholders.

Judicial foreclosures generally provide more protection for the property owner than non-judicial foreclosures because they require the lender to file a lawsuit and they involve a judge. Most foreclosures in California are non-judicial, also called trustee sales. The process of a trustee sale takes approximately four months[7]. Judicial foreclosures are rare in California. They are typically used when no power of sale is present in the contract, in which case the court declares a foreclosure and the home is auctioned off to pay back the financer. The homeowner has the "right of redemption" under judicial foreclosure, which allows him or her to buy the home back for one year after the sale. Timelines for judicial foreclosures vary because they involve the court system. A judicial foreclosure with redemption may take approximately two and a half years[8].

Although PACE programs have the authority to institute judicial foreclosure proceedings under PACE legislation, some programs have the internal policy not to use this remedy when others are available. For example, Alliance NRG defers to the relevant County's tax delinquency policies, which tend to provide more opportunities for tax redemption. HERO, Ygrene and Open PACE programs listed above have not initiated a single foreclosure since they began operations.

ECONOMIC IMPACT

The HERO, YGrene, and Open PACE programs have similar potential benefits to property owners as CaliforniaFIRST and Figtree PACE. They provide an alternative method for owners to finance improvements and to realize the energy and water cost savings related to them. If Hayward experiences high participation in PACE programs, local green jobs may be created to complete these energy, water, and seismic improvements.

The primary benefit of allowing an open PACE market in Hayward is to increase the total amount of financing available to Hayward property owners for improvements. However, it is unclear how much demand there is from Hayward property owners for additional financing. So far, there have only been two PACE projects in Hayward. Both were commercial projects financed by CaliforniaFIRST.

As mentioned above, there are also potential economic risks to property owners when they take on PACE financing. In the worst case, cost savings may not materialize as predicted and the owners could end up owing more than they can afford, which could result in increased foreclosures.

[7] http://www.car.org/legal/foreclosure-short-sale-folder/foreclosure-timeline-pdf-1/
[8] http://real-estate-law.freeadvice.com/real-estate-law/mortgage_matters/mortgage-foreclosure-process.htm

However, this has not been the experience of PACE programs up to this point and staff feels that the risk is low. On the contrary, most PACE programs claim that the default rates of their property owners are lower than nationwide averages.

FISCAL IMPACT

Participation in PACE programs does not impact the General Fund or any City funds. PACE programs use private sector capital to provide property owners with funding.

NEXT STEPS

Staff is recommending the below actions.

- That the Committee recommends that the City Council approve resolutions to join HERO, Ygrene, and OPEN Pace. Upon this direction, staff will present Council with resolutions to join the Western Riverside Council of Governments and the Golden State Finance Authority, and resolutions to include Hayward properties in the HERO Program, Community Facilities District No. 2014-1 (Ygrene), and the CSCDA Open PACE Program.

- That staff will devote time in the coming year to providing further information on the City's website about the terms of each PACE program and to hosting a financing workshop for property owners interested in PACE financing.

Prepared by: Mary Thomas, Administrative Analyst

Recommended by: Alex Ameri, Director of Utilities & Environmental Services

Approved by:

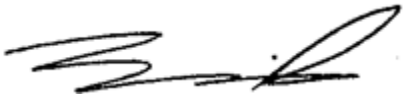

Fran David, City Manager

Attachments:

Attachment I	PACE Program Comparison Table
Attachment II	Requirements to Participate in the PACE Loss Reserve Program

Program	JPA	Administered by	Funding	Total Financing Available in CA	Nearby Jurisdictions	Total CA Jurisdictions	seismic retrofitting	Contractors	Eligible Costs
HERO Residential	Western Riverside Council of Governments (WRCOG)	Renovate America	Municipal Bonds	Unlimited	Albany, Berkeley, Concord, Walnut Creek, Redwood City, San Jose, San Francisco	219 84 coming soon	No	Mandatory certification	Audits, labor, design, drafting, engineering, permit fees, inspection charges
HERO Commercial		Samas Capital							
Ygrene Residential	California Home Finance Authority	Ygrene Energy Fund	Private Capital from Local Banks	Unlimited	Davis, Woodland, Sacramento	47 (5 commercial only) 5 coming soon	Yes	Mandatory certification and training	Audits, labor, design, drafting, engineering, permit fees, inspection charges
Ygrene Commercial									
CaliforniaFIRST Residential	California Statwide Communities Development Authority (CSCDA)	Renewable Funding	Venture Capital		Alameda, Berkeley, Dublin, Fremont, Newark, Oakland, San Leandro	300 plus	No	Mandatory certification	Audits, labor, design, drafting, engineering, permit fees, inspection charges
CaliforniaFIRST Commercial									
Alliance NRG (OpenPACE Residential)	California Statwide Communities Development Authority (CSCDA)	Deutsche Bank, Leidos Engineering and Counterpointe Energy Solutions			Berkeley, San Francisco, Campbell, Burlingame	20	Yes	Mandatory certification	Audits, labor, design, drafting, engineering, permit fees, inspection charges
Alliance NRG (OpenPACE Commercial)									
Figtree Commercial	California Enterprise Development Authority (CEDA)	Figtree Company, Inc.	Bonds/REITs	Unlimited	Dublin, San Jose, Burlingame, Redwood City, Walnut Creek	117	Yes	Mandatory approval	Audits, labor, design, drafting, engineering, permit fees, inspection charges

	Eligible Properties/Property Owners						Costs			
Program	Minimum financing	Current on property taxes	Total debt on property must not exceed	Total annual property tax and assessments	late Mortgage payments	Declaration of bankruptcy	Interest Rate Terms	Interest Rate	Program Fees	Disclosure to property owner of FHFA stance on PACE
HERO Residential	$5,000	no more than one late payment in past three years	10% of property's value	Not to exceed 5% of property's market value	Not more than one 30 day late payment in last 12 months	Depending on city, not within 2 to 7 years	Fixed at time financing docs are issued	6.75% - 8.45%	$130 + 4.99% Closing	Application
HERO Commercial			20% or property's value		None in past 6 months	Not within 7 years		5.75% - 6.5%	$1,025	
Ygrene Residential	$2,500	Currently	15% of property value	Not to exceed 5% of property's market value	Must be current	Not currently	At the time the property owner enters into a UAA	5.99% - 7.75%	$700	Multiple Disclosures (Financing Docs & Lender Notification process)
Ygrene Commercial								5.99% - 7.75%	Starts at $700	
CaliforniaFIRST Residential	$5,000	no more than one late payment in past three years	10% of property value	Not to exceed 5% of property's market value	Not more than one in past 12 months	Not within 2 years	set at the time that Financing Documents are issued	6.75% - 8.39%	6.5% + 6.5% Closing	
CaliforniaFIRST Commercial								6.5% - 6.75%		
Alliance NRG (OpenPACE Residential)	$5,000	No additional liens on property for pase three years	10% of property value	Not to exceed 5% of property's market value		Not within 7 years	fixed at time of completed application			
Alliance NRG (OpenPACE Commercial)										
Figtree Commercial	$2,500	no late payment in past three years	10% of property value	Not to exceed 5% of property's market value	no late payment in past three years	Not within 5 years		4.63%-6.5%	$695	Application/Lender Consent for commercial projects

Requirements to Participate in the PACE Loss Reserve Program

California Code of Regulations
- Title 4. Business Regulations
  - Division 13. California Alternative Energy Source Financing Authority
    - Article 4. Pace Loss Reserve Program
      - § 10081. Application by Pace Program to the Pace Loss Reserve.

A PACE Program seeking to participate in the PACE Loss Reserve Program shall complete an application that shall include the following information:

(a) The formation documents required pursuant to:

(1) Streets and Highways Code Sections 5898.20-5898.22, and 5898.24; or,

(2) Chapter 2.5 (commencing with Section 53311) of Part 1 of Division 2 of Title 5 of the Government Code; or,

(3) In the case of a charter city, a copy of a resolution or other document adopted by the city's governing board evidencing approval of the PACE Program.

(b) If not included in the documentation required in subdivision (a) above, documents showing that the PACE Program requires that property owners can show all of the following as part of the financing underwriting process:

(1) All property taxes for the assessed property are current for the previous three years or since the current owner acquired the property, whichever period is shorter.

(2) The property is not subject to any involuntary lien in excess of $1,000.

(3) The property is not subject to any notices of default.

(4) The property owner is not in bankruptcy proceedings.

(5) The property owner is current on all mortgage debt.

(6) The party seeking financing is the holder of record on the property.

(7) The property is within the geographical boundaries of the PACE Program.

(8) The Financing is for a residential property of three units or fewer.

(9) The Financing is for less than fifteen percent (15%) of the value of the property, up to the first seven hundred thousand dollars ($700,000) of the value of the property, and is for less than ten percent (10%) of the remaining value of the property above seven hundred thousand dollars ($700,000).

(10) The total mortgage-related debt and PACE Financing on the underlying property does not exceed the value of the property.

(c) If not included in the documentation required in subdivision (a) above, a detailed description of:

(1) The transactional activities associated with the Financing issuance, including all transactional costs; and,

(2) Requirements for quality assurance and consumer protection, as related to achieving efficiency and clean energy production; and,

(3) Any credit enhancement or insurance associated with the PACE Program.

(d) A summary of the PACE Program's existing residential Financing portfolio certified pursuant to Section 10087 as of the date of application. The summary shall include the following information:

(1) The total number of Financings in the portfolio.

(2) The total value of the portfolio.

(e) The PACE Program's agreement to permit an audit of any of its records relating to enrolled Loans, during normal business hours on its premises, by the Authority or its agents, and to supply such other information concerning enrolled Loans as shall be requested by the Executive Director [of the California Alternative Energy and Advanced Transportation Financing Authority].

(f) Upon receipt of a completed application, the Executive Director will within ten business days review and determine whether the application is complete, or whether additional information is required to enroll the PACE Program. The Executive Director's decision whether an application is complete shall be final.

CITY OF
HAYWARD
HEART OF THE BAY

DATE: June 18, 2015

TO: Council Sustainability Committee

FROM: Director of Utilities & Environmental Services

SUBJECT: Water Conservation, Efficiency, Outreach, and Rebate Programs

RECOMMENDATION

That the Committee reviews and comments on this report.

SUMMARY

Hayward implements an aggressive and effective water conservation program, consisting of mandatory requirements, voluntary programs, education and outreach, and water use reduction strategies at City facilities. The City's current water conservation programs and incentives are similar to or better than those offered by most Bay Area water agencies. These programs, along with the City's mild climate, and its development types and sizes, have contributed to making Hayward's current per-capita water use among the lowest in not only the Bay Area but the entire State. The program is fully funded in the Water Fund and therefore impacts water rates that the City must charge to recover costs.

BACKGROUND

Hayward has a long-standing and active commitment to water conservation. As an original signatory to the California Urban Water Conservation Council Memorandum of Understanding (MOU) dated December 31, 2002, the City has implemented cost-effective water demand management measures to reduce water usage by all customer sectors, offering a mix of voluntary programs including rebates, audits, education, and fixture replacements. Many of these programs have been implemented regionally, in cooperation with other Bay Area Water Supply and Conservation Agency (BAWSCA) members, to provide cost efficiencies and a consistent message to customers throughout the geographic area. In addition to assisting external customers, the City has focused significant resources towards water use efficiency at City-owned properties, notably in landscape irrigation and system leak detection.

The City's conservation programs are responsible in part for Hayward's residential per capita water consumption, which, at 56 gallons per capita per day (gpcd) in FY 2014, is among the lowest, not only in the Bay Area, but in the entire State. Gross per-capita use is also relatively low, in spite of Hayward being home to a state university, community college, a hospital, and a large diverse industrial sector. Residential per capita water use is considered one of the truest measures of water use efficiency, and

further reductions in Hayward's already low usage will be a challenge. Nonetheless, water use efficiency is an important factor in overall environmental sustainability.

DISCUSSION

Key elements of Hayward's water conservation efforts fall into the following general categories: 1) Water Use Efficiency Policies and Ordinances; 2) Indoor and Outdoor Water Conservation Programs; 3) Outreach and Education; and 4) City-Specific Water Conservation Activities. The following paragraphs briefly summarize the key components of each category.

Water Use Efficiency Policies and Ordinances

The Hayward City Council has enacted a variety of policies and ordinances which demonstrate the City's commitment to water use efficiency.

- *Civic Bay-Friendly Landscaping Ordinance*. This ordinance, which went into effect in 2008, establishes sustainable landscaping requirements, including water use efficiency, for publicly funded projects. The Route 238 landscaping is an example of a Civic Bay-Friendly design.

- *Hayward Environmentally Friendly Landscape Guidelines.* All landscape projects with more than 5,000 square feet of landscaped area are required to include a minimum of 75% water efficient plants, limit turf area to less than 25% of the total landscaped area, lay three inches of mulch, and install efficient irrigation and rain sensors.

- *Water Efficient Landscape Ordinance*. The City first adopted a Water Efficient Landscape Ordinance in 1993. An updated City of Hayward Bay-Friendly Water Efficient Landscape Ordinance, which includes elements of the Hayward Environmentally Friendly Landscape Guidelines, became effective in January 2010.

- *Dedicated Irrigation Meter Ordinance*. This ordinance, which went into effect in 2008, requires separate irrigation meters for planting areas that exceed 5,000 square feet. Separating irrigation use from indoor use generally results in improved water use monitoring. The City actively encourages the installation of dedicated irrigation meters for smaller projects as well.

- *Pricing Signals*.
  - *Low Service Charge*. Hayward's service (or fixed) charge is among the lowest in the Bay Area. Most of the customer's water bill is due to the cost of water used and is therefore, to some extent, controllable by the customer. In FY 2014, only about 10% of the total water revenue came from fixed charges. The downside to low service charges is that more of the City's water revenue is subject to fluctuation due to climate and consumption patterns.
  - *Residential Wastewater Charges.* Hayward is one of the few agencies to offer a residential wastewater rate structure that is somewhat tied to water usage and thus encourages water conservation. In addition to the standard residential rate, customers can automatically benefit from two lower sewer rates if their water consumption meets certain thresholds.

Indoor and Outdoor Water Use Efficiency Programs

The most reliable and permanent water savings come from the installation of water efficient appliances and fixtures. The City has taken several steps to increase indoor water use efficiency, including:

- *High Efficiency Toilet (HET) Rebates.* The City currently offers rebates of up to $100 for the replacement of an existing high-water use toilet (3.5 gallons or more per flush) with a standard HET (between 1.06 and 1.28 gallons per flush) model. To date, over 1,200 rebates have been issued, with estimated water savings of 3.2 million gallons (mg) per year. Beginning in July, the program will rebate up to $125 for the replacement of an existing toilet with a Maximum Performance (MaP) Premium model toilet (1.06 gallons or less per flush) or up to $75 for a standard HET (between 1.06 and 1.28 gallons per flush). The program will no longer require that the new toilet replace an existing high-water use model. Staff markets this program through direct contact with vendors, promotional literature and website information.

- *Water Efficient Clothes Washing Machine Rebates.* Customers may receive a rebate of $100 (in combination with PG&E) for the purchase of an Energy Star certified clothes washing machine. Close to 5,300 rebates have been issued, resulting in estimated water savings of 30 mg per year.

- *Fixture Replacements.* High quality, water saving showerheads and faucet aerators are provided to customers at no cost upon request. To date, 981 showerheads and 1,726 aerators have been given to water account customers, with an estimated water savings of 9 mg per year.

- *Lawn Conversion Rebates.* Customers are eligible to receive a rebate for converting water-thirsty lawns to water-efficient landscapes. With the continued drought, the popularity of this program has increase significantly. Since the program began in 2012, 45 applications have been submitted, with 27 of those having been received in CY 2015. Residential customers can receive up to $750 for converting the lawn in their front yards and up to $500 for converting the lawn in their backyard. Commercial properties are eligible for rebates of up to $5,000 for converted areas visible to the public and up to $3,000 for converted areas not visible to the public.

- *Rain Barrel Rebates:* The City introduced a new program in late 2014 in which customers can receive a rebate (up to $100 for residential properties and up to $200 for commercial properties) for the purchase and installation of rain barrels to collect and re-use rainwater from gutters and downspouts for landscaping. 1,000 square feet of roof surface can capture 625 gallons of water for every 1 inch of rainfall. To date, one rebate has been issued; however, these programs tend to take a while to become established. It is anticipated that participation in this program will increase during the rainy season.

- *Pre-Rinse Spray Valves.* About 200 food-related businesses have been equipped with a pre-rinse valve to reduce water used for cleaning dishes and cooking utensils. Estimated water savings, as calculated by the vendor, is about 10 million gallons per year.

- *Large Landscape Water Use Surveys.* Hayward contracted with Gates & Associates to prepare water budgets, perform on-site irrigation surveys, and develop recommendations to

reduce usage for twenty large landscape sites. The detailed information was provided to the customers, and staff is currently monitoring the results to determine actual savings.

Outreach and Education

Hayward has invested considerable resources into educating its customers of all ages about the importance and value of water use efficiency, and how they can reduce their water consumption. Although firm water savings from these types of programs are difficult to calculate, staff believes that public education and outreach is important in maintaining public awareness and encouraging behavioral changes.

- *School Programs*
  - *In-Class Curriculum* – The WaterWise curriculum is offered to about 600 fifth grade students annually at no charge to the Hayward Unified School District, as well as private schools. The program includes teaching aids, activity books, and high quality fixtures that families can install in their homes.
  - *School Assembly Program* – A recent addition to Hayward's water conservation program are school assemblies. Produced by EarthCapades, a well-regarded producer of environmental theater programs, these assemblies teach students about the water cycle and water conservation. Close to 6,000 students participated in FY 2014, and feedback from teachers and principals has been uniformly positive.

- *Water Efficient Landscape Classes.* Hayward hosts an average of six classes annually, conducted by a noted landscape professional, to teach residents about water efficient plant selection and irrigation systems. The classes, which are marketed mainly through water bill inserts, are well attended and enthusiastically received.

- *Community Events.* Staff participates in a variety of community events, including the Downtown Street Fairs, school events, and organization meetings, to provide information and water conserving devices to the public.

City-Specific Activities

Recognizing the importance of "practicing what we preach," the City has implemented measures to manage water resources responsibly and reduce water use at City facilities and in publicly landscaped areas.

- *Water Balance and Audit.* The City engaged professional services to examine water use and determine the volume and causes of so-called unbilled water, that is, water purchased from the wholesaler but not sold to customers. The consultant identified areas where water management could be improved, such as meter test and replacement and system pressure. While these strategies do not necessarily reduce water use, they help the City ensure that purchased water is put to beneficial use and that purchase costs are recovered in an equitable manner.

- *Leak Detection Survey and Repair.* The Water Balance and Audit determined that there was potential in the water system for significant loss through leaks. The City completed a system-wide leak detection survey, using acoustical equipment to identify leaks in the

distribution lines and at each service connection. About 75 leaks were located and repaired, resulting in the recovery of an estimated 125 mg per year.

- *Landscape Upgrades*. In recent years, the City has incorporated Bay-Friendly principles, including water use efficiency, into landscape rehabilitation projects at several City-owned sites. These gardens serve as demonstrations of attractive, water conserving landscapes, and help the City reduce its water costs. Examples of these completed and planned projects include:

    - *Route 238 Project* – Bay-Friendly landscaping has been installed, including a mix of native and water-conserving Mediterranean plants.
    - *Highland 1000 Reservoir* – This water storage facility site is landscaped with mostly California native plants, which provide erosion control, as well as water use efficiency.
    - *Eden Youth Center* – About 7,500 square feet of turf was removed and replaced with native and drought tolerant plants, as well as a more efficient subsurface irrigation system.
    - *Utilities Center* – The existing lawn will be replaced with a mix of California natives and drought tolerant plant material.

- *Plumbing Fixture Replacements*. Older high-water use toilets and urinals have been replaced with high efficiency models.

- *Landscape Maintenance Activities*. The City's Water Operating Fund supports two full-time positions dedicated to ensuring that irrigation systems on City properties maximize water efficiency.

<u>Future Water Conservation Activities</u>

In the near term, future activities include expanding the information on the City's website regarding water conservation and improving the format so that the information is more readily accessible. Staff will be seeking out opportunities to improve the marketing of existing programs to increase awareness and participation. Although additional programs are not imminent, staff will continue to evaluate potential new opportunities to determine their suitability and effectiveness for Hayward. Staff will seek to maximize resources by participating in regional programs when it is in Hayward's best interest.

ECONOMIC IMPACT

To the extent that customers reduce their water use, they will benefit from lower water bills, in comparison to customers who use higher volumes. However, there is also a direct relationship between water consumption and the water rates that the City must charge for the costs that are not directly impacted by water consumption. As water use decreases, the per-unit rates charged to cover fixed costs, such as core employee services, must necessarily increase in order to keep pace.

Some agencies have addressed this issue by increasing the service charge, which is a fixed amount based on water meter size. This charge is intended to cover activities such as meter reading and

billing services. It has historically been the Council's desire to maintain the service charge at the lowest possible level, so that customers can exercise maximum control over their water bills.

FISCAL IMPACT

Water conservation activities are fully funded from the Water Operating Fund, and are supported by water rates. The current budgeted costs for all programs total about $1 million, including staffing and other costs for landscape conservation. This figure represents about 3% of the Water Operating Fund expenditures. To the extent that additional programs are added, the costs will need to be incorporated into the rates. No General Fund monies are utilized in the implementation of water conservation activities.

PUBLIC CONTACT

Depending on the specific program, the City employs a variety of tools to inform and educate about the public programs available to help reduce water consumption, including the City's website, billing inserts, direct contact at community events, and brochures. As mentioned, a priority for staff is to improve the website design and information to ensure that it is current and readily accessible.

A strategic communications plan was developed by the City's Communications & Media Relations Officer to raise awareness of the drought conditions, acknowledge the water savings that Hayward customers have achieved so far, and promote water conservation and best practices. This plan includes an interactive webpage (http://www.hayward-ca.gov/droughtwatch/) that provides information and resources to the public in a very accessible manner. Staff continues to work with regional partners, using a variety of communication tools, including billboard messages, social media, direct mail, email newsletters, and updated website information, to inform and encourage customers to take the drought seriously and cut back where possible.

NEXT STEPS

Staff will continue to implement existing programs, assuming they remain cost effective, and seek out additional opportunities to work independently or collaboratively with other agencies on new and innovative programs.

Prepared by: Alicia Sargiotto, Senior Utility Service Representative

Recommended by: Alex Ameri, Director of Utilities & Environmental Services

Approved by:

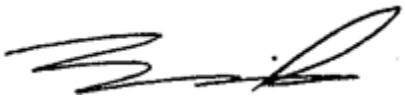

Fran David, City Manager

CITY OF HAYWARD
HEART OF THE BAY

DATE: June 18, 2015

TO: City Council Sustainability Committee

FROM: Director of Utilities and Environmental Services

SUBJECT: Public Litter Containers – Locations for New Containers throughout City

RECOMMENDATION

That the Committee reviews and comments on this report.

DISCUSSION

There are currently approximately 280 public litter containers located throughout the City. Three are Bigbelly units located Downtown. As part of the contract with Waste Management that took effect March 1, 2015, the City will be receiving 20 new pairs of Bigbelly[1] units and 50 new exposed aggregate containers.

Bigbelly

Exposed Aggregate

While the three existing Bigbelly units have solar-powered compaction, the new units will not so that costs can be minimized. Also, the size and design of the openings limit the potential for household garbage and the service frequency limits the need for compaction. Downtown containers are on a five-day per week service schedule and outlying areas are serviced three days per week. Staff intends to relocate the current units to make better use of the compaction feature. Also, the new Bigbelly units will have sign panels on the sides that the City can use for various messaging.

Staff mapped all of the existing containers and identified locations for some of the new containers. Attachment I includes maps showing existing and proposed container locations.

[1] http://bigbelly.com/

During the Committee meeting, staff will present an interactive GIS map with the ability to zoom in on specific areas and see photos of existing containers. Some of the proposed containers are to replace broken or damaged containers and some are located in areas where there are currently no containers. Staff identified 28 containers to be removed, some of which will be replaced. Of the new containers, staff is proposing locations for 15 of the new Big Bellies and 22 of the new exposed aggregate containers.

On May 28, 2015, staff shared the map of proposed locations with the Keep Hayward Clean and Green Task Force and received the following suggestions for locations of new containers:

- B and Second Streets
- Mission Blvd. and Carlos Bee Blvd.
- Municipal parking lot between B and C Streets
- B & Grand and area along B Street near BART

Staff has updated the map to incorporate the above suggested locations. One Task Force member also asked about Dixon Street where there are currently no containers. Maintenance Services staff indicated that parking revenues from the South Hayward BART station area may be used to purchase containers for Dixon Street. Staff will work together to identify needs along Dixon and then install containers accordingly.

The Task Force also suggested that for some of the older exposed aggregate containers that are in need of painting or repair, the City could work with local students to paint and/or apply mosaic tile designs. Environmental Services staff currently does not have the staff resources that would be needed to manage such a program, but will explore other means of getting the containers painted.

NEXT STEPS

Staff recently received the shipment of Bigbelly units. Staff will incorporate any comments from the Committee into the map of proposed locations and then work closely with Maintenance Services staff to install the units this summer, and place the new exposed aggregate containers when they arrive.

Prepared by: Erik Pearson, Environmental Services Manager

Recommended by: Alex Ameri, Director of Utilities and Environmental Services

Approved by:

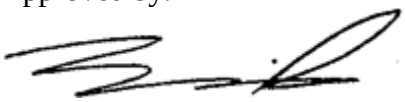

Fran David, City Manager

Attachments:

Attachment I Maps of Existing and Proposed Container Locations

Proposed Locations for Public Litter Containers

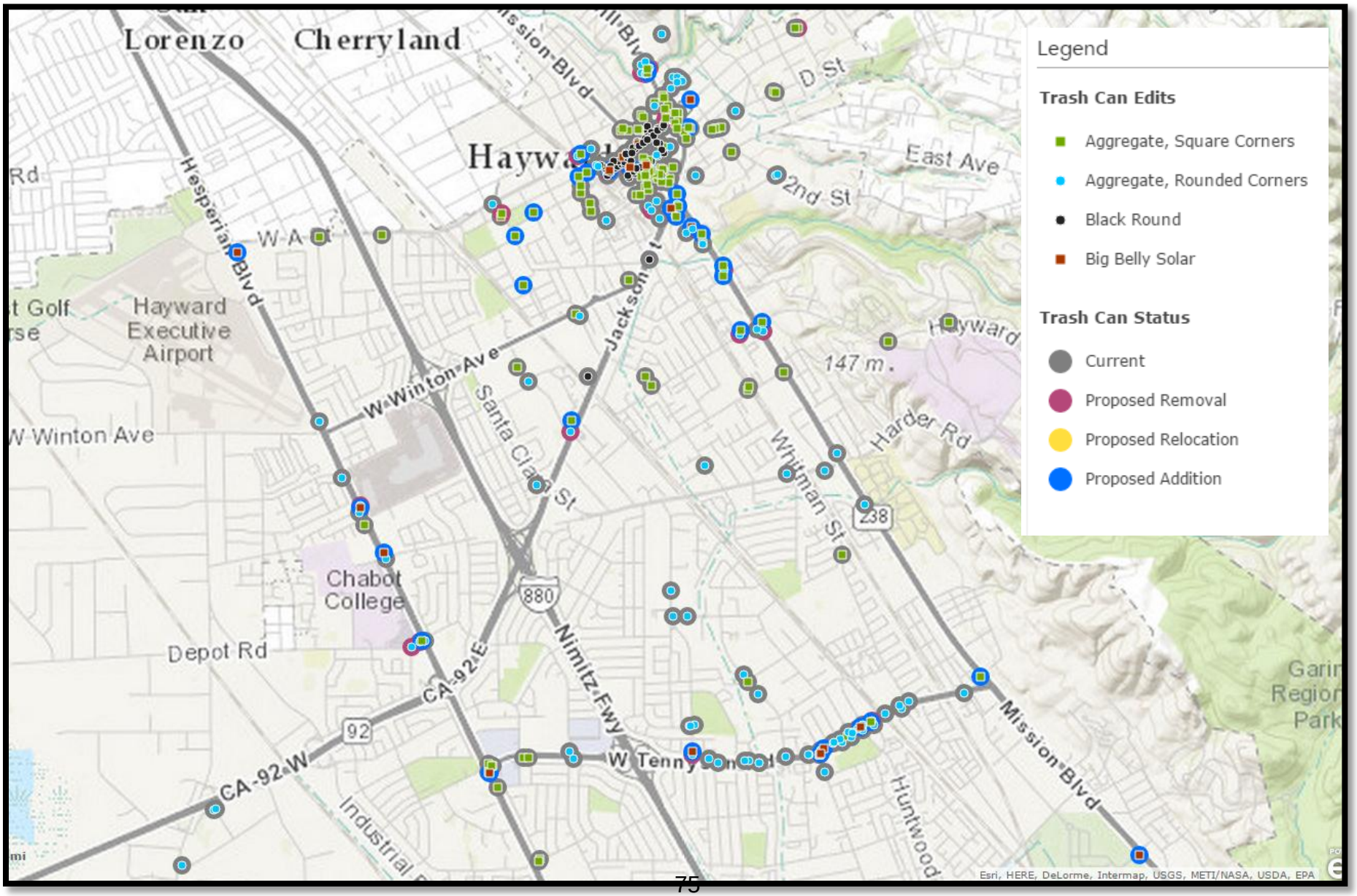

Proposed Locations for Public Litter Containers - Downtown

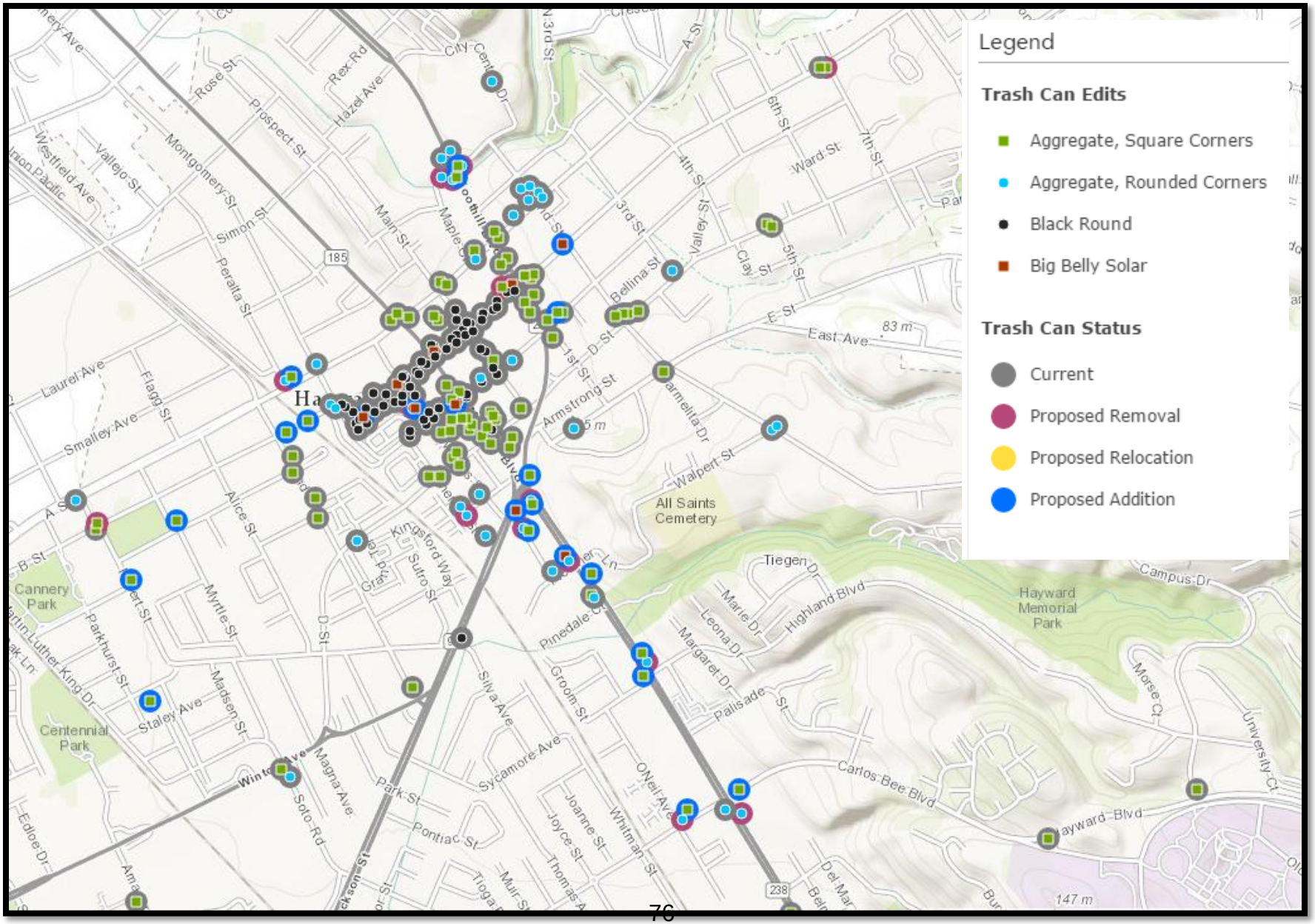

Suggested Sustainability Committee Quarterly Meeting Topics for 2015

Presenting Department	TOPICS
June 18, 2015	
U&ES	Community Choice Aggregation – Update & Report on May 18 Conference
U&ES	Update on Emergency Water Conservation Regulations & Water Supply Outlook
U&ES	Renewable Energy at the Water Pollution Control Facility
U&ES	Property Assessed Clean Energy (PACE) – Consideration of new programs
U&ES	Water Conservation, Efficiency, Incentives, and Rebate Programs
Dev. Services	Streamlined Permitting for Small Residential Solar Energy Systems
U&ES	Public Litter Containers – Locations for New Containers throughout City
September 10, 2015	
U&ES	Recycled Water Project Update
U&ES	Sustainability Education & Outreach, GreenHayward.gov (website)
U&ES	Sustainability Metrics & Energy Update: 2014, Energy Reduction Initiative
U&ES	Waste Reduction Report – Annual Update on Recycling Programs
U&ES	Update on Community Choice Aggregation
U&ES	Lighting Retrofit for City Facilities
U&ES	Update on Advanced Metering Infrastructure (AMI) Pilot Program
U&ES	Litter from Take-Out Food & Beverage Establishments
U&ES	Zero Net Energy Policy for City Facilities
December 10, 2015	
U&ES	Renewable Energy Generation and Near-Term Potential at City Facilities
U&ES	Annual Update on Administrative Rule 3.9 – Environmentally Preferred Purchasing Policy
U&ES	Bike Sharing
U&ES	Climate Action Plan – Status on Meeting Goals
U&ES	California Youth Energy Services (CYES) – Report on 2015 Activities
U&ES	Update on PAYS Implementation
U&ES	Update on Car Sharing Grant
U&ES	Update on EPA Trash Reduction Grant
U&ES	Review Agenda Topics For 2016